PMP Exam 4

Question 1 of 200
Question ID: 612094
Project execution has just begun. As the project manager, you want to ensure the work is being performed according to the required quality standards.

What is your best course of action?

A Implement the quality management plan using the appropriate tools and techniques

B Verify that the project deliverables conform to the standards established in the quality management plan

C Develop the quality management plan and define the quality standards for the project and its products

D Obtain feedback from relevant stakeholders to evaluate their satisfaction

Question answered correctly

Hint:
You are in the Manage Quality process.

Correct Answer: A

Explanation:

The question states your project is in execution, and the scenario implies you want to carry out the Manage Quality process. During the Manage Quality process, quality activities are performed according to the quality management plan which was developed to incorporate the required quality standards. Therefore, to ensure the work is being performed according to the required quality standards, you need to implement the quality management plan using the tools and techniques specified in the plan. Task 3 of Domain III in the Project Management Professional (PMP)® Examination Content Outline reads, "Implement the quality management plan using the appropriate tools and techniques in order to ensure that work is performed in accordance with required quality standards."

Details for Each Option:

A Implement the quality management plan using the appropriate tools and techniques

Correct. During Manage Quality, which according to the scenario is the process you are going to carry out, quality activities are performed according to the quality management plan which was developed to incorporate the required quality standards. To ensure the work is being performed according to the required quality standards, you need to implement the quality management plan using the tools and techniques outlined in the plan.

B Verify that the project deliverables conform to the standards established in the quality management plan

Incorrect. Verifying the project deliverables is performed in the Control Quality process to determine the correctness of the deliverables. According to the scenario, you want to ensure the work is being performed according to the required quality standards rather than determine the correctness of the deliverables.

C Develop the quality management plan and define the quality standards for the project and its products

Incorrect. Developing the quality management plan is the main activity of the Plan Quality Management process which is part of the Planning Process Group. The scenario suggests the project is execution; therefore, the quality management plan has already been developed.

D Obtain feedback from relevant stakeholders to evaluate their satisfaction

Incorrect. Obtaining feedback from stakeholders to evaluate their satisfaction is typically performed as part of the Close Project or Phase process after the customer has accepted the completed deliverable. In the scenario, the project is in execution and concerned with the quality of the work being performed. Therefore, obtaining feedback from stakeholders is not what you should do.

Reference:

A Guide to the Project Management Body of Knowledge, (PMBOK® Guide) – Sixth Edition, Project Management Institute Inc., 2017, Page(s) 288; see also Project Management Professional (PMP)® Examination Content Outline, Project Management Institute Inc., June 2015, Domain III, Task 3

PMP Exam 4

Question 2 of 200
Question ID: 610058
A project is divided into four sequential phases. The second phase of the project has just been completed, and the third phase is about to begin.

What should the project manager do first?

A Begin the process of directing and managing the project work

B Perform the process of identifying the project stakeholders

C Start the process of monitoring and controlling the project work

D Begin the process of developing the project management plan

Question answered incorrectly

Hint:
A new phase should begin with the Initiating Process Group.

Correct Answer: B

Explanation:

The process of identifying project stakeholders occurs for the first time in a project either before or at the same time the project charter is developed and approved. It is repeated as necessary but should be performed at the start of each phase and when a significant change in the project or organization occurs. Each time the identification process is repeated, the project management plan components and project documents should be consulted to identify relevant project stakeholders.

Details for Each Option:

A Begin the process of directing and managing the project work

Incorrect. A project or a new phase of an existing project is started with the Initiating Process Group. The Direct and Manage Project Work process is part of the Executing

Process Group. Therefore, this answer choice can be eliminated.

B Perform the process of identifying the project stakeholders

Correct. The Initiating Process Group is made up of two project management processes, Develop Project Charter and Identify Stakeholders. The Initiating Process Group is performed to define a new project or a new phase of an existing project by obtaining authorization to start the project or phase. Of the available options, only the Identify Stakeholders process is part of the Initiating Process Group and, therefore, is the best answer to the question asked.

C Start the process of monitoring and controlling the project work

Incorrect. The Monitor and Control Project Work process is part of the Monitoring and Controlling Process Group. The phase must be initiated, planned, and execution must be underway before there can be any project work to monitor and control.

D Begin the process of developing the project management plan

Incorrect. The Develop Project Management Plan process is part of the Planning Process Group. A phase is started with the Initiating Process Group and not the Planning Process Group, making this an incorrect answer.

Reference:

A Guide to the Project Management Body of Knowledge, (PMBOK® Guide) – Sixth Edition, Project Management Institute Inc., 2017, Page(s) 508

PMP Exam 4

Question 3 of 200
Question ID: 612632
A project manager contracted a vendor to develop the software for a new billing system. Shortly after the deliverables were formally accepted, the system crashed leading to downtime and a substantial financial loss. An internal investigation concluded that a computer virus had been residing in the new software due to the vendor's negligence.

After the claim with the vendor is settled, what is the best way to prevent this issue from recurring?

A Record the final resolution of the problem in the issue log

B Capture the situation and its resolution in the lessons learned register

C Update the risk register with the implementation of the risk response

D Conduct future software development projects with only internal resources

Question answered incorrectly

Hint:
Which response represents an action which supports continuous improvement?

Correct Answer: B

Explanation:

The lessons learned register is a project document used to record knowledge gained during a project so that it can be used to improve the performance of the current project. At the end of the project, the information contained in the lessons learned register is then transferred to an organizational process asset called the lessons learned repository for use in future projects. Any information regarding claims and how they were resolved should be documented in the lessons learned register to avoid recurrences in the future. Note, the question does not explicitly mention future projects. It reads, "What is the best way to prevent this issue from recurring?" Even though future projects are not mentioned, it can be implied. Additionally, the question suggests the current project is over. Therefore, preventing this issue from recurring infers recurring in future projects. Therefore, of the available choices, capturing the knowledge gained in the lessons learned register is the best way to prevent the problem from recurring.

Details for Each Option:

A Record the final resolution of the problem in the issue log

Incorrect. It is not known from the question whether the problem was captured in the issue log. Assuming it was, then the final resolution should be recorded as a project document update. However, the issue log will not make the information available for use in future projects, so this action is not the best way to prevent a recurrence of the issue.

B Capture the situation and its resolution in the lessons learned register

Correct. Information regarding any claims and how they were resolved should be documented in the lessons learned register to avoid recurrences in the future.

C Update the risk register with the implementation of the risk response

Incorrect. The question does not specify if the risk of a computer virus was identified earlier in the project. If this risk was captured in the risk register, then it may be updated with status changes and finally closed out. However, the risk register from the current project does not serve as an input for future projects, and the knowledge gained would be lost.

D Conduct future software development projects with only internal resources

Incorrect. Using only internal resources would allow more control over the project. However, the performing organization may not have internal resources with the necessary skillset. Additionally, a computer virus could still be an issue even with using internal resources. Therefore, just using in-house developers is not likely to prevent the problem from occurring in the future.

Reference:

A Guide to the Project Management Body of Knowledge, (PMBOK® Guide) – Sixth Edition, Project Management Institute Inc., 2017, Page(s) 500

PMP Exam 4

Question 4 of 200
Question ID: 612627
A project manager is in the process of developing the risk management plan. The project manager has just pulled a blank template of a risk breakdown structure (RBS) from the organizational process assets.

What should the project manager do next?

A Determine the risk categories

B Develop a comprehensive list of project risks

C Create the risk register

D Develop responses to individual project risks

Question answered incorrectly

Hint:
Which answer choice describes an activity associated with an element of the risk management plan?

Correct Answer: A

Explanation:

The question implies that the Plan Risk Management process is underway with the development of the risk management plan. One of the elements of the risk management plan is risk categories. Risk categories provide a means for grouping individual project risks. A common way to structure risk categories is with a risk breakdown structure (RBS), which is a hierarchical representation of potential sources of risk. An RBS helps the project team consider the full range of sources from which individual project risks may arise. This approach may help during the Identify Risks process to identify individual project risks as well as sources of overall project risks. The incorrect answer choices represent actions associated with Project Risk Management processes other than Plan Risk Management. Therefore, after obtaining a blank template of an RBS, the next logical step is to determine the risk categories for inclusion in the RBS.

Details for Each Option:

A Determine the risk categories

Correct. One of the elements of the risk management plan is risk categories. Risk categories provide a means for grouping individual project risks. A common way to structure risk categories is with a risk breakdown structure (RBS).

B Develop a comprehensive list of project risks

Incorrect. The development of the risk management plan indicates that the Plan Risk Management process is underway. A comprehensive list of project risks is developed during the Identify Risks process which follows the Plan Risk Management process.

C Create the risk register

Incorrect. The question implies that the Plan Risk Management process is being performed. The risk register is created as an output of the Identify Risks process, rather than the Plan Risk Management process.

D Develop responses to individual project risks

Incorrect. The development of responses to individual project risks is part of the Plan Risk Responses process which comes later in project risk planning. The scenario describes the development of the risk management plan which precedes risk identification and the development of the responses to those risks.

Reference:

A Guide to the Project Management Body of Knowledge, (PMBOK® Guide) – Sixth Edition, Project Management Institute Inc., 2017, Page(s) 405

PMP Exam 4

Question 5 of 200
Question ID: 626016
A project manager has encountered a new issue during project execution and wants to document this issue in the issue log.

What should the project manager do first?

A Add the issue to the issue log

B Submit a change request to update the issue log

C Analyze the impact of the issue and submit a change request to update the issue log

D Consult the issue management plan on how to manage new issues on the project

Question answered incorrectly

Hint:
The issue log is not a part of the project management plan.

Correct Answer: A

Explanation:

The issue log is a project document used by the project teams to document issues they encounter on the project. Unlike the project management plan, which is a controlled document, the issue log is a project document and not a part of the project management plan. To be updated, the issue log does not require a change request. When a new issue arises on the project, the project manager should first add the issue to the issue log, assign an owner and a target resolution date. The issue log should then be reviewed regularly to ensure the issues are addressed. No change request is needed when an uncontrolled document has to be updated. However, if the resolution of the issue will require the project team to take actions that will eventually affect any of the components of the project management plan, which is a controlled document, then a change request should be submitted and processed accordingly.

Details for Each Option:

A Add the issue to the issue log

Correct. When a new issue arises throughout the course of a project, the issue should be added to the issue log.

B Submit a change request to update the issue log

Incorrect. The issue log is not a controlled document and does not require a change request to be updated.

C Analyze the impact of the issue and submit a change request to update the issue log

Incorrect. While an impact of the issue on the project can and should be analyzed, and any further actions taken, entering the issue into the issue log should be the first step. Again, the issue log is not a controlled document and does not require a change request to be updated.

D Consult the issue management plan on how to manage new issues on the project

Incorrect. 'Issue management plan' is a fake term made up for this question.

Reference:

A Guide to the Project Management Body of Knowledge, (PMBOK® Guide) – Sixth Edition, Project Management Institute Inc., 2017, Page(s) 96

PMP Exam 4

Question 6 of 200
Question ID: 612439
A project manager has been authorized to apply organizational resources to a new project.

What should the project manager do next?

A Develop the summary milestone schedule

B Create the assumption log

C Develop the project business documents

D Finalize the project charter

Question answered incorrectly

Hint:
Try to eliminate the activities, which have already been done.

Correct Answer: B

Explanation:

The question states that the project manager has been authorized to apply organizational resources to the project, implying the project charter has been approved as part of the Develop Project Charter process. However, it does not necessarily mean that the process itself has been completed. At that point, the project business documents such as the benefits management plan and the business case would have been used as inputs to the Develop Project Charter process, the project charter would be finalized, and the summary milestone schedule would exist as part of the project charter. By process of elimination, the project manager should next create the assumption log, which is, in addition to the project charter, an output of the Develop Project Charter process.

Details for Each Option:

A Develop the summary milestone schedule

Incorrect. By saying that the project manager has been authorized to apply organizational resources to a new project, the question suggests that the project charter has been created and approved. The summary milestone schedule is part of the project charter and, therefore, should have already been developed.

B Create the assumption log

Correct. It can be implied from the scenario, that the project is in the Develop Project Charter process. In addition to the project charter, the assumption log is an output of this process.

C Develop the project business documents

Incorrect. The project business documents include the business case and benefits management plan. These documents are created during pre-project work and serve as inputs into the Develop Project Charter process inferred by the scenario. Since the question implies that the project charter has already been approved, the business documents would have been developed previously.

D Finalize the project charter

Incorrect. The project charter provides the project manager with the authority to apply organizational resources to project activities. According to the scenario, the project manager has been authorized to apply organizational resources to a new project. Therefore, it can be assumed the project charter has already been finalized.

Reference:

A Guide to the Project Management Body of Knowledge, (PMBOK® Guide) – Sixth Edition, Project Management Institute Inc., 2017, Page(s) 81

PMP Exam 4

Question 7 of 200
Question ID: 612588
You are in the planning stage of a large project, which will require contracts with various vendors and suppliers to produce the project's deliverables. With the procurement management plan and make-or-buy analysis complete, you are about to begin the development of a document that will outline the procurement strategy for the project.

Which of the following are you least likely to include in this document?

A Procurement delivery methods

B Type of agreements

C Responsibilities of stakeholders

D Procurement phases

Question answered incorrectly

Hint:
The question is asking for the element that is 'least' likely to be included in the procurement strategy. One of the answer choices should be included in the procurement management plan rather than the procurement strategy.

Correct Answer: C

Explanation:

The procurement strategy is determined as part of the Plan Procurement Management process. The procurement strategy, an output from this process, is comprised of three elements which include procurement delivery methods, type of agreements, and procurement phases. The question is asking for the element which is 'least' likely to be included in the procurement strategy. The responsibilities of stakeholders, as it pertains to procurements, is an element of the procurement management plan rather than the procurement strategy. Therefore, of the available options, the responsibilities of stakeholders is the best answer to the question asked.

Details for Each Option:

A Procurement delivery methods

Incorrect. This answer choice represents one of the three elements typically included in the procurement strategy.

B Type of agreements

Incorrect. The type of agreements is one of the three components that are typically included in the procurement strategy.

C Responsibilities of stakeholders

Correct. The responsibilities of stakeholders, as it pertains to procurements, is an element of the procurement management plan rather than the procurement strategy.

D Procurement phases

Incorrect. Procurement phases are generally included in the procurement strategy.

Reference:

A Guide to the Project Management Body of Knowledge, (PMBOK® Guide) – Sixth Edition, Project Management Institute Inc., 2017, Page(s) 476, 481

PMP Exam 4

Question 8 of 200
Question ID: 613738
You and your team are meeting to evaluate vendor proposals. One of the team members previously worked with Company A and praised their professionalism and quality. Another team member prefers Company B. Several other team members join the conversation by adding their opinions.

What should you remind the team members to focus on to select a seller?

A Procurement statement of work (SOW)

B Bid documents

C Source selection criteria

D Procurement management plan

Question answered incorrectly

Hint:
Which procurement document is used in the evaluation of vendor proposals?

Correct Answer: C

Explanation:

Source selection criteria are a set of measurable attributes desired by the buyer which a seller is required to meet or exceed to be selected for a contract. By focusing on source selection criteria, a proposal can be evaluated quantitatively, thereby removing any personal biases.

Details for Each Option:

A Procurement statement of work (SOW)

Incorrect. The procurement SOW provides sellers with a clearly stated set of goals, requirements, and outcomes from which they can produce a proposal for the work they will provide. In this scenario, the sellers' proposals have already been received. Therefore, this

is not a correct answer.

B Bid documents

Incorrect. Bid documents are used to solicit proposals from prospective sellers. In this scenario, the vendors' proposals have already been received. Therefore, this is not the correct answer.

C Source selection criteria

Correct. Source selection criteria are measurable and provide a quantitative basis for evaluation of proposals thereby minimizing personal biases. The source selection criteria are the best thing for your project team to focus on when choosing the vendor.

D Procurement management plan

Incorrect. The procurement management plan details the activities to be undertaken during the procurement process. Source selection criteria are part of the procurement documents, not part of the procurement management plan. Therefore, this is not a correct answer.

Reference:

A Guide to the Project Management Body of Knowledge, (PMBOK® Guide) – Sixth Edition, Project Management Institute Inc., 2017, Page(s) 485, 478, 723

PMP Exam 4

Question 9 of 200
Question ID: 613846
A project manager provides overall direction, training, and support to her cross-functional team, but entrusts the team to manage and track their own work assignments and make decisions as a group. The project manager participates in regular team meetings to monitor the team's progress and provide support, but generally stays out of discussions about workload or team decision making.

What is the project manager employing to manage the team?

A Emotional intelligence

B Self-organizing teams

C Team building

D Motivation

Question answered incorrectly

Hint:
This methodology is commonly associated with agile project management frameworks.

Correct Answer: B

Explanation:

This is an example of a self-organizing team, where the project manager provides overall direction and support while entrusting team members to make their own decisions and manage the work. The other answer choices may be part of the project manager's management approach, but self-organizing teams is the better answer choice.

Details for Each Option:

A Emotional intelligence

Incorrect. Although the project manager may be using emotional intelligence to a certain

degree, that is not the primary technique or methodology she is applying to manage the team.

B Self-organizing teams

Correct. Self-organizing teams are often used for projects using agile approaches. In this scenario, the project manager and the team have roles that are typical of a self-organizing team. The project manager provides overall direction and support while entrusting the team to manage their own work to get the job done.

C Team building

Incorrect. Team building is conducting activities that enhance the team's social relations and build a collaborative and cooperative working environment. Although the project manager is cultivating an environment that supports team building, this scenario is best described as an example of a self-organizing team.

D Motivation

Incorrect. Motivation is providing a reason for someone to act. Teams are motivated by empowering them to participate in decision making and encouraging them to work independently. Although this is an attractive answer choice because the project manager is motivating the team to work independently and make their own decisions, the method he is using to empower and motivate them is a self-organizing team approach.

Reference:

A Guide to the Project Management Body of Knowledge, (PMBOK® Guide) – Sixth Edition, Project Management Institute Inc., 2017, Page(s) 310, 341

PMP Exam 4

Question 10 of 200
Question ID: 613684
You are managing a new needs assessment project. While you are analyzing the monthly progress data your team has submitted, you notice that one of your project team members has spent half as much time working on a project activity than you had planned.

What should you do?

A Reward the team member for finishing the activity ahead of schedule

B Investigate further to determine if there is a problem

C Issue a corrective action as you obviously overestimated the activity duration

D Do nothing now and wait for the next month's progress data.

Question answered incorrectly

Hint:
The Monitor and Control Project Work process balances the demands of the all the knowledge areas to control the project.

Correct Answer: B

Explanation:

The Monitor and Control Project Work process is part of Integration Management. The project manager must balance the demands of all the knowledge areas to control the project. You can't get a good understanding of how the project is performing against the project plan by only monitoring one aspect of the project, for example, one employee's activity report. Therefore, further investigation needs to be completed before acting on data from one process.

Details for Each Option:

A Reward the team member for finishing the activity ahead of schedule

Incorrect. You certainly want to reward employees for good work, but at this point, you

don't know if the activity was completed correctly or if the team member completed other activities on time. A further investigation would be warranted.

B Investigate further to determine if there is a problem

Correct. You can't get a good understanding of how the project is performing against the project plan by only monitoring one aspect of the project. You should review both the quality of the deliverables produced by the team member during the activity and whether she met other planned milestones. Once you have investigated further, you will know if there is a discrepancy between your planned and actual estimates.

C Issue a corrective action as you obviously overestimated the activity duration

Incorrect. Just because the team member worked half the hours, you had planned for her to work on an activity doesn't mean you estimated incorrectly. Perhaps there are other reasons for the discrepancy. Once you have investigated further, you will know if there is a discrepancy between your planned and actual estimates. Based on the result of your investigation, you can issue a corrective action, if necessary.

D Do nothing now and wait for the next month's progress data.

Incorrect. A project manager should be proactive. Waiting a month for new progress data could allow a problem to worsen, if there is a problem, making this an incorrect choice.

Reference:

A Guide to the Project Management Body of Knowledge, (PMBOK® Guide) – Sixth Edition, Project Management Institute Inc., 2017, Page(s) 105-108

PMP Exam 4

Question 11 of 200
Question ID: 612549
A project has been in execution for several months, and project communications have been sent out regularly. During a meeting with the customer, some of the stakeholders indicate they have not received the most recent performance report, which is supposed to be sent out every two weeks.

What should the project manager do first?

A Document the issue in the issue log

B Update the lessons learned register

C Review the communications management plan

D Update the change log

Question answered incorrectly

Hint:
How can a project manager ensure that a problem encountered on a project will be investigated and resolved?

Correct Answer: A

Explanation:

An issue is a current condition or situation that may have an impact on the project objectives. A project performance report that has not been received by some of the project stakeholders as scheduled is an issue and should be documented in the issue log. The issue log is a project document where all problems encountered during a project are recorded and tracked. The scenario suggests the project is in the Manage Communications process. Updates to the issue log are among the outputs of the Manage Communications process. By adding the issue to the issue log, the project manager can effectively manage the issue so that it can be documented, tracked, and eventually resolved. All the other answer choices may be suitable responses 'after' the issue is recorded in the issue log, but the first thing the project manager should do is update the issue log.

Details for Each Option:

A Document the issue in the issue log

Correct. The issue log is a project document where all issues encountered during a project are recorded and tracked. Having just become aware of the problem with the receipt of the most recent performance reports, the project manager would first want to update the issue log with the information so that the matter can be documented, tracked, and eventually resolved.

B Update the lessons learned register

Incorrect. The lessons learned register is updated with information on challenges encountered and how they could have been avoided as well as approaches that worked well. In the scenario described, the project manager has just been made aware that some of the stakeholders did not receive the performance reports. There has not been any investigation into why the reports were not received. Therefore, updating the lessons learned register is premature.

C Review the communications management plan

Incorrect. The communications management plan describes how project communications will be handled as well as provides information on stakeholder communication requirements including details on who is to receive which type of information. While the project manager would want to review the plan to understand the stakeholders' requirements, he would first want to ensure the situation is recorded and tracked by adding the lack of performance reports to the issue log.

D Update the change log

Incorrect. The change log is used to document information on changes that occur during a project. The change log would have to be updated if a change is requested. However, based on the scenario provided, the project manager has just discovered that some stakeholders have not received the performance reports. Therefore, he does not have enough information to determine what change, if at all, is required at this point.

Reference:

A Guide to the Project Management Body of Knowledge, (PMBOK® Guide) – Sixth Edition, Project Management Institute Inc., 2017, Page(s) 387, 96

PMP Exam 4

Filtered Mode: Displaying 200 questions

Question 12 of 200
Question ID: 613706
You are managing the development of a new user interface. You have produced the first interim deliverable for the project, which is currently being evaluated by the quality control department. Last weekend, at the company barbecue, you spoke with several business development executives and asked them what they thought about the interim deliverable. They shared how they were satisfied with the deliverable and were pleased with the project's progress.

What best describes what you have done?

A Scope validation

B Verification of the interim deliverable

C Managing quality

D Monitoring stakeholder engagement

Question answered incorrectly

Hint:
Part of monitoring stakeholder engagement is consistently knowing their position on the project.

Correct Answer: D

Explanation:

Maintaining stakeholder relationships and understanding stakeholders' perceptions of the project's progress is accomplished in the Monitor Stakeholder Engagement process. Monitor Stakeholder Engagement is the process of monitoring project stakeholder relationships and tailoring strategies for engaging stakeholders through modification of engagement strategies and plans. Meetings, either formal or informal, can be used as a tool in the Monitor Stakeholder Engagement process. In this scenario, you have had simple conversations with the stakeholders, revealing their attitudes about the project and its progress.

Details for Each Option:

A Scope validation

Incorrect. Scope validation is the process of formally accepting a project deliverable. Before a deliverable can be accepted, it must have gone through the Control Quality process. In this scenario, the deliverable is in the process of being verified; therefore, it is not available for scope validation. Aside from that, scope validation is a formal process; it wouldn't be performed at a barbeque party.

B Verification of the interim deliverable

Incorrect. The Control Quality process determines the correctness of deliverables resulting in verified deliverables. In the scenario described, the deliverable is in the process of being evaluated; therefore, it has not yet been verified.

C Managing quality

Incorrect. Managing quality focuses on implementing the quality management plan into executable quality activities, identifying ineffective processes and causes of poor quality neither of which are mentioned in the scenario.

D Monitoring stakeholder engagement

Correct. Monitoring stakeholder engagement helps determine the position of stakeholder groups and individuals at any particular time in the project. The business development executives, in this scenario, are sharing their satisfaction with the project progress and interest in the interim deliverable, thereby sharing their levels of engagement.

Reference:

A Guide to the Project Management Body of Knowledge, (PMBOK® Guide) – Sixth Edition, Project Management Institute Inc., 2017, Page(s) 533

PMP Exam 4

Filtered Mode: Displaying 200 questions

Question 13 of 200
Question ID: 612347
You are managing a site excavation project with an aggressive schedule. You have just received approval for the project management plan.

Which process are you least likely to perform next?

A Execution of the communications management plan

B Selection of the vendors that will produce project deliverables

C Validation of the project deliverables

D Acquisition of the necessary project resources

Question answered incorrectly

Hint:
Project execution begins after the project management plan has been reviewed and approved by the relevant stakeholders.

Correct Answer: C

Explanation:

The Project Management Professional (PMP)® Examination Content Outline contains a detailed list of tasks for each domain, with which PMP aspirants are expected to be familiar. Task #11 of the planning domain states, "Present the project management plan to the relevant stakeholders according to applicable policies and procedures in order to obtain approval to proceed with project execution." Validation of the project deliverables takes place when the Validate Scope process is carried out. The Validate Scope process is part of the Monitoring and Controlling Process Group. Since the project management plan has just been approved, proceeding with project execution rather than with monitoring and controlling makes the more sense. Execution of the communications management plan, selection of the vendors that will produce project deliverables, and acquisition of the necessary project resources are all activities that belong to the processes of the Executing Process Group. Only validation of the project deliverables belongs to the Monitoring and Controlling Process Group, making that choice the best answer to the question asked.

Details for Each Option:

A Execution of the communications management plan

Incorrect. Once the project management plan has been reviewed and approved, project execution can begin. The execution of the communications plan describes the Manage Communications process which is an execution process, making this choice an incorrect answer.

B Selection of the vendors that will produce project deliverables

Incorrect. Project execution begins after the project management plan has been reviewed and approved. The selection of vendors that will produce project deliverables describes the Conduct Procurements process which is an execution process. Vendors can be selected as early as project execution begins. Therefore, Conduct Procurements is not the least likely process to be completed next.

C Validation of the project deliverables

Correct. Validation of the project deliverables is the main activity of the Validate Scope process. The question states the project management plan has just been approved. Therefore, it is reasonable to assume that no deliverables have been produced yet, meaning there is nothing to validate. Thus, of the choices provided, validation of the project deliverables is the least likely process for you to perform next and is, therefore, the best answer to the question asked.

D Acquisition of the necessary project resources

Incorrect. After the project management plan has been reviewed and approved, project execution starts. The acquisition of the necessary project resources describes the Acquire Resources process which is an execution process, and not the least likely process to be completed next.

Reference:

A Guide to the Project Management Body of Knowledge, (PMBOK® Guide) – Sixth Edition, Project Management Institute Inc., 2017, Page(s) 25; see also Project Management Professional (PMP)® Examination Content Outline, Project Management Institute Inc., June 2015, Domain 2, Task 11

PMP Exam 4

Filtered Mode: Displaying 200 questions

Question 14 of 200
Question ID: 650108
A project manager is leading a product development project, which will use an agile framework. The project team and other stakeholders are co-located at the company's corporate office.

What is the best way for the project manager to communicate the project status and promote transparency?

A Reserve a conference room and invite all relevant stakeholders to monthly project status meetings

B Post burndown charts and other project status documents to the company's intranet site

C Share the appropriate information whenever requested by stakeholders

D Display burndown charts and other relevant project artifacts in a highly visible location

Question answered incorrectly

Hint:
How might daily project status updates be communicated using a form of push communications?

Correct Answer: D

Explanation:

Agile best practices promote transparency. Displaying burndown charts and other relevant project information in a highly visible location promotes transparency as current information regarding project status is readily available to everyone. All of the answer choices represent actions that should be taken by the project manager. The PMP aspirant should select the 'best' answer among the available options. With the project team and stakeholders co-located at the corporate office, posting the project status in a highly visible location will make current information readily available to everyone. Note that the incorrect answer choices all represent an action that must be taken by the stakeholders in order to retrieve the information rather than having the information proactively presented to them. The correct answer choice describes an agile best practice. Therefore, of the available options, displaying burndown charts and other relevant project artifacts in a highly visible location is the 'best' answer to the question asked.

Details for Each Option:

A Reserve a conference room and invite all relevant stakeholders to monthly project status meetings

Incorrect. Holding monthly project status meetings is a good idea. However, the project status will change daily during project execution. A monthly meeting will only provide a snapshot of the project status. To promote transparency as asked by the question, it is better to make current information readily available.

B Post burndown charts and other project status documents to the company's intranet site

Incorrect. The project manager probably should post any relevant project status documents to the company's intranet site. However, this action requires the project team and stakeholders to proactively access the information rather than having the information readily available to them.

C Share the appropriate information whenever requested by stakeholders

Incorrect. The project manager should share any relevant information upon request. However, requiring stakeholders to seek out the information they need is not the best way to keep stakeholders informed and promote transparency.

D Display burndown charts and other relevant project artifacts in a highly visible location

Correct. Agile best practices encourage transparency. Displaying burndown charts and other relevant project information in a highly visible location promotes transparency as the information readily available to everyone.

Reference:

A Guide to the Project Management Body of Knowledge, (PMBOK® Guide) – Sixth Edition, Project Management Institute Inc., 2017, Page(s) 365

PMP Exam 4

Filtered Mode: Displaying 200 questions

Question 15 of 200
Question ID: 612100
You are concerned that too many quality audits drove the project costs beyond the planned value.

To which cost group would you categorize these audits?

A Cost of nonconformance, prevention costs

B Cost of conformance, failure costs

C Cost of nonconformance, cost-benefit costs

D Cost of conformance, appraisal costs

Question answered incorrectly

Hint:
The work performed as part of the Manage Quality process, which includes quality audits, falls under the conformance work category in the cost of quality framework.

Correct Answer: D

Explanation:

The cost of quality is divided into the cost of conformance where money is spent during the project to avoid failures and, the cost of nonconformance where money is spent during and after the project because of failures. Appraisal costs are a cost of conformance that is related to evaluation, measuring, auditing, and testing the product or service of the project. Quality audits, often performed during the Manage Quality process, identify project processes that have gaps or shortcomings and are, therefore, considered an appraisal cost and part of the cost of conformance.

Details for Each Option:

A Cost of nonconformance, prevention costs

Incorrect. Prevention costs are related to the prevention of poor quality in the products, deliverables, or services of the specific project. For example, the expenses to cover training for the team, providing the right equipment, and allowing the team the time to 'do it right.' Prevention costs are considered the cost of conformance, not the cost of nonconformance.

B Cost of conformance, failure costs

Incorrect. Failure costs are the money spent during and after the project because the product or service did not meet the expectations of the customer. The scenario does not describe failures. Also, failure costs are considered the cost of nonconformance, not the cost of conformance.

C Cost of nonconformance, cost-benefit costs

Incorrect. This answer choice represents a mix of two unrelated items, cost of nonconformance, which is the money spent during and after the project because of failures; and cost-benefit analysis, which is a financial tool used to estimate the strengths and weaknesses of alternatives in order to determine the best alternative in terms of benefits provided.

D Cost of conformance, appraisal costs

Correct. The cost of conformance is the money spent during a project to avoid failures. Appraisal costs include expenses related to evaluating, measuring, auditing, and testing the product or service of the project. Appraisal costs are considered part of the cost of conformance. Therefore, you should categorize the cost of the quality audits as appraisal costs and part of the cost of conformance.

Reference:

A Guide to the Project Management Body of Knowledge, (PMBOK® Guide) – Sixth Edition, Project Management Institute Inc., 2017, Page(s) 282-283, 289, 294-295

PMP Exam 4

Filtered Mode: Displaying 200 questions

Question 16 of 200
Question ID: 613048
A new director of business development has just been hired. Recent focus groups revealed several promising concepts he is interested in pursuing. But first, he needs to know what projects are in progress to determine what his involvement should be. The director requests the project managers in each office send him high-level information on authorized and currently active projects.

What document would best fulfill the director's request?

A Approved business case

B Approved project register

C Approved project management plan

D Approved project charter

Question answered incorrectly

Hint:
What document contains high-level information about a project?

Correct Answer: D

Explanation:

When a scenario mentions 'high level,' you should be thinking project charter because it is the document that contains high-level information about the project. In this case, of the choices provided, the only answer choice that would provide high-level project information is the approved project charter. By reviewing the approved project charters, the director would have an understanding of the key deliverables, milestones, and the role and responsibilities of stakeholders. He can use the approved project charter to help determine his own role in the projects.

Details for Each Option:

A Approved business case

Incorrect. The project's business case is an economic feasibility study demonstrating the benefits of a project concept and is used as the basis for further project management activities. The business case would not include the specific high-level information about the project that the director has requested, and therefore, of the choices provided, is not the best answer.

B Approved project register

Incorrect. 'Project register' (either approved or not) is a made-up term.

C Approved project management plan

Incorrect. The project management plan is comprised of several subsidiary plans that describe how the project will be executed, monitored and controlled, and closed. The project management plan has more project detail than what is being requested by the director, and since there is another answer that includes a better project overview (i.e., the approved project charter), the project management plan is not the best answer.

D Approved project charter

Correct. The approved project charter formally authorizes the existence of a project and provides the project manager with the authority to use company resources. The approved project charter includes high-level information, such as project objectives, milestones, and the roles and responsibilities of key stakeholders. The approved project charter would provide the director with the information he requested.

Reference:

A Guide to the Project Management Body of Knowledge, (PMBOK® Guide) – Sixth Edition, Project Management Institute Inc., 2017, Page(s) 81, 561

PMP Exam 4

Filtered Mode: Displaying 200 questions

Question 17 of 200
Question ID: 612977
A company is considering two projects, project A with the internal rate of return (IRR) of 25% and project B with the IRR of 15%.

Which project should the company select and why?

A Project B because a lower IRR represents lower costs

B Project A because it has a higher IRR

C Project B because a lower IRR represents a shorter payback period

D Project A because letter "A" comes before "B"

Question answered incorrectly

Hint:
The internal rate of return (IRR) is the interest rate at which the cash inflow and cash outflow of the project equal zero.

Correct Answer: B

Explanation:

The internal rate of return (IRR) is the interest rate at which the cash inflow and cash outflow of the project equal zero. The IRR can be an important metric for benefits analysis. The PMP exam will not likely ask you to calculate the IRR. However, two important concepts should be understood for the exam. First, a positive IRR means a positive rate of return. Second, all other things being equal or no other details are provided, a project with a higher IRR is typically selected over a project with a lower IRR. In the scenario described, the company should select project A with the IRR of 25% over project B with the IRR of 15%.

While the topic of this question is just briefly mentioned in the *PMBOK® Guide*, the Project Management Professional (PMP)® Examination Content Outline, June 2015, covers knowledge and skills with which PMP aspirants are expected to be familiar. Project finance principles are among these knowledge and skills.

Details for Each Option:

A Project B because a lower IRR represents lower costs

Incorrect. IRR is an internal rate of return. There is no correlation between the IRR and costs.

B Project A because it has a higher IRR

Correct. The internal rate of return (IRR) is the interest rate at which the cash inflow and cash outflow of the project equal zero. A higher IRR means a higher potential rate of growth (return). Therefore, of the two projects, project A with the IRR of 25% is preferable than project B with the IRR of 15%.

C Project B because a lower IRR represents a shorter payback period

Incorrect. IRR is an internal rate of return. There is no correlation between the IRR and the payback period.

D Project A because letter "A" comes before "B"

Incorrect. This answer choice is obviously nonsense.

Reference:

A Guide to the Project Management Body of Knowledge, (PMBOK® Guide) – Sixth Edition, Project Management Institute Inc., 2017, Page(s) 34-35

PMP Exam 4

Filtered Mode: Displaying 200 questions

Question 18 of 200
Question ID: 612255
A project sponsor is developing the project charter. She understands that the project would have to take into consideration conditions that are not under the immediate control of the project team.

Which of the following is an example of such conditions?

A Project monitoring and reporting methods

B An approved template of a project charter

C Legislation on overtime pay for the project team

D Historical information and lessons learned repository

Question answered incorrectly

Hint:
Enterprise environmental factors are conditions, not under the immediate control of the team, that influence, constrain, or direct the project.

Correct Answer: C

Explanation:

The question describes enterprise environmental factors (EEFs), which are conditions, not under the immediate control of the team, that influence, constrain, or direct the project. These conditions can be internal and/or external to the performing organization. EEFs are one of the inputs to the Develop Project Charter process. The legislation, which imposes overtime pay is an example of a legal requirement which is not under the immediate control of the project team and is external to the organization. The incorrect answer choices represent organizational process assets. Among the available options, only the legislation that may impose overtime pay for the project team represents a constraint that is considered an enterprise environmental factor.

Details for Each Option:

A Project monitoring and reporting methods

Incorrect. Project monitoring and reporting methods are examples of the organizational process assets, while the scenario implies the project sponsor is looking for the enterprise environmental factors.

B An approved template of a project charter

Incorrect. An approved project charter template is an example of an organizational process asset. Whereas, the question refers to enterprise environmental factors.

C Legislation on overtime pay for the project team

Correct. Legislation that imposes overtime pay is an example of a legal requirement. Legal and regulatory requirements are enterprise environmental factors, which are not under the immediate control of the project team.

D Historical information and lessons learned repository

Incorrect. Historical information and lessons learned repository are examples of the organizational process assets, while according to the scenario, the project sponsor is interested in the enterprise environmental factors.

Reference:

A Guide to the Project Management Body of Knowledge, (PMBOK® Guide) – Sixth Edition, Project Management Institute Inc., 2017, Page(s) 78

PMP Exam 4

Filtered Mode: Displaying 200 questions

Question 19 of 200
Question ID: 613794
The total budget for the project is $50 million, and the actual costs so far are $40 million. The project has a CPI of 0.92 and the SPI of 0.80.

What is the estimate at completion that considers both the cost and schedule performance?

A $54.35 million

B $57.94 million

C $53.20 million

D $17.93 million

Question answered incorrectly

Hint:
Both the SPI and the CPI influence the remaining work, so the EAC formula must be chosen accordingly.

Correct Answer: B

Explanation:

In this scenario, the project work that is remaining to be completed is impacted by the fact that there is no flexibility in the project schedule. The completion date must be met. One needs to use a formula for the EAC that considers both the SPI and the CPI. This formula is EAC = AC + [(BAC - EV) / (CPI x SPI)]. The EV is not provided and therefore has to be obtained using the formula CPI = EV / AC. The details of the calculation are below:

EV = AC x CPI = 40 x 0.92 = 36.8

EAC = AC + [(BAC - EV) / (CPI x SPI)] = 40 + [(50 – 36.8) / (0.92 x 0.8)]= 40 + [13.2 / 0.736] = 40 + 17.94 = 57.94

Details for Each Option:

A $54.35 million

Incorrect. The formula used for this answer is EAC = BAC / CPI. This formula is used when the CPI is expected to be the same for the remainder of the project. However, in this scenario, you do not necessarily expect CPI to be the same for the remainder of the project. Since there is no flexibility on the project completion date, an equation that includes the SPI must be used.

B $57.94 million

Correct. In this scenario, there is no flexibility on the scheduled completion date. Therefore, the CPI and SPI influence the remaining work. The correct formula is EAC = AC+ [(BAC-EV) / (CPI x SPI)].

C $53.20 million

Incorrect. The formula used for this answer is EAC = AC + BAC - EV. This formula is used when the present cost variance was only a one-time event, and the future work will be accomplished at the planned rate. In the scenario described, the CPI has been consistently low, and the SPI needs to be included because the project completion date cannot be adjusted.

D $17.93 million

Incorrect. The formula used for this answer is ETC = EAC - AC and is the formula for the estimate 'to' complete, not the estimate 'at' completion. The ETC is the expected cost to finish all the remaining project work. The EAC is the expected 'total' cost of completing all project work, which is what is asked for in the question.

Reference:

A Guide to the Project Management Body of Knowledge, (PMBOK® Guide) – Sixth Edition, Project Management Institute Inc., 2017, Page(s) 265, 267

PMP Exam 4

Filtered Mode: Displaying 200 questions

Question 20 of 200
Question ID: 613773
Increased latency in transaction times was an identified risk for a software upgrade project. While monitoring project risks, the project team performs some data analysis and discovers that the latency issues have resulted in average transaction times of 37 minutes versus a target of 12 minutes.

What data analysis tool or technique has the project team most likely utilized?

A Monte Carlo simulation

B Multicriteria decision analysis

C Technical performance analysis

D Perform Quantitative Risk Analysis

Question answered incorrectly

Hint:
What data analysis technique associated with the Monitor Risks process utilizes the technical performance measurement of transaction times?

Correct Answer: C

Explanation:

The scenario implies the team is carrying out the Monitor Risks process. Technical performance analysis is an example of the data analysis tools and techniques that can be used as part of this process. Technical performance analysis compares technical accomplishments during project execution to the schedule of technical achievement. It requires the definition of objective, quantifiable measures of technical performance, which can be used to compare actual results against targets. Such technical performance measures may include weight, transaction times, number of delivered defects, storage capacity, etc. A deviation can indicate the potential impact of threats and opportunities. Of the choices provided, based on the circumstances described by the scenario, technical performance analysis is the most likely tool the project team has utilized.

Note, while "latency in transaction times" may sound like an unfamiliar term, no technical

knowledge is required to answer this question correctly.

Details for Each Option:

A Monte Carlo simulation

Incorrect. A Monte Carlo simulation is an analysis technique where a computer model is iterated many times and outputs are generated to represent the range of possible outcomes for the project. In this case, the average transaction time has been determined to be 37 minutes rather than a range of possible outcomes.

B Multicriteria decision analysis

Incorrect. Multicriteria decision analysis is a technique that utilizes a decision matrix to provide a systematic analytical approach for establishing criteria, such as risk levels, uncertainty, and valuation, to evaluate and rank many ideas. The project team is comparing the actual project results with the planned targets. This activity is different from the multicriteria decision analysis making this choice an incorrect answer.

C Technical performance analysis

Correct. Technical performance analysis compares technical accomplishments during project execution to the schedule of technical achievement. It requires the definition of objective, quantifiable measures of technical performance, which can be used to compare actual results against targets. Such technical performance measures may include weight, transaction times, number of delivered defects, storage capacity, etc. A deviation can indicate the potential impact of threats and opportunities.

D Perform Quantitative Risk Analysis

Incorrect. Perform Quantitative Risk Analysis is the process of numerically analyzing the combined effect of identified individual project risks and other sources of uncertainty on overall project objectives. The question is asking for a tool or technique.

Reference:

A Guide to the Project Management Body of Knowledge, (PMBOK® Guide) – Sixth Edition, Project Management Institute Inc., 2017, Page(s) 456

PMP Exam 4

Filtered Mode: Displaying 200 questions

Question 21 of 200
Question ID: 612497
You are working with your project team to obtain administrative closure of a project. The project was performed exclusively with internal resources provided by the functional leaders.

Which of the following is most likely to be the last action taken in this scenario?

A Conducting a survey to measure stakeholder satisfaction

B Finalizing open claims

C Transferring the final product to operations

D Releasing the project team

Question answered incorrectly

Hint:
At least some of the project team must be available to perform the administrative closure of the project.

Correct Answer: D

Explanation:

Although some of the project team members may be released before the project has been closed, some of the project team must remain to perform the activities associated with the administrative closure of the project. Even if only the project manager remains on the project, the project manager is considered a member of the project team. Note, the *PMBOK® Guide* does not specify the order in which activities are performed during the Close Project or Phase process. However, it makes sense that the project team cannot be released until all other activities associated with the administrative closure of the project have been completed. Hence, of the available choices, releasing the project team is the last action that should be taken and is, therefore, the best answer to the question asked.

Details for Each Option:

A Conducting a survey to measure stakeholder satisfaction

Incorrect. This answer choice does represent an action associated with the administrative closure of the project. However, a member of the project team must be available to collect and analyze the survey information. Therefore, measuring stakeholder satisfaction must be completed before the project team can be released.

B Finalizing open claims

Incorrect. Finalizing open claims is one of the steps completed during the administrative closure of the project. Claims may result as part of the procurement process. The question states that the project was completed exclusively with internal resources, which means that vendors were not used for the project. Therefore, it is not logical that any claims would exist in this scenario. Even if the project did have an open claim, this is not the last activity, of the available options, to be performed.

C Transferring the final product to operations

Incorrect. The transfer of the software to operations is one of the tasks that should be completed for administrative closure of the project. However, at least some of the project team must perform this activity. Therefore, the project team cannot be released until this activity is complete.

D Releasing the project team

Correct. Although some of the project team members may be released before the project has been closed, some of the project team must remain to perform the activities associated with the administrative closure of the project.

Reference:

A Guide to the Project Management Body of Knowledge, (PMBOK® Guide) – Sixth Edition, Project Management Institute Inc., 2017, Page(s) 121, 123

PMP Exam 4

Filtered Mode: Displaying 200 questions

Question 22 of 200
Question ID: 625214
You are leading a project to build ten new houses. This project is the second such for the company. The previous project came in on budget and schedule. You have been provided the cost per square foot per home. The same team from the previous project will be working at the same salary rate on your project.

Based on the information you have, which of the following is the most appropriate cost estimating tool or technique to use in this scenario?

A Three-point estimating

B Vendor bid analysis

C Analogous estimating

D Parametric estimating

Question answered incorrectly

Hint:
Which estimating tool uses both historical data and other project parameters?

Correct Answer: D

Explanation:

Based on the information provided, you are performing Estimate Costs process. You have access to the salary of your project team, historical data from the previous similar project, and information about some of the parameters of your current project. Parametric estimating uses a statistical relationship between relevant historical data and other variables. For example, construction projects can use square footage as a parameter. Therefore, parametric estimating, unlike the other answer choices, is the most appropriate tool to use given the information provided. Three-point estimating uses a formula that considers three uncertainty and risk factors in the estimation: most likely, optimistic, and pessimistic. Analogous estimating could also be used in this scenario, but it is generally used in the absence of current or new information. Vendor bid analysis involves estimating costs based on bids from multiple vendors.

Details for Each Option:

A Three-point estimating

Incorrect. To define cost range, three-point estimating uses three estimation scenarios: most likely, optimistic, pessimistic. You are provided the cost elements and are using historical information as well. Therefore, three-point estimating is not your best choice.

B Vendor bid analysis

Incorrect. Vendor bid analysis would be used by a buyer to evaluate costs of bids from multiple vendors. The question does not suggest that the project involves multiple vendors.

C Analogous estimating

Incorrect. Analogous estimating uses historical data such as cost and duration from previous projects to estimate costs of the current project. Analogous estimating is typically used when there is limited information about the current project. In this scenario, the information is available, and therefore, analogous estimating is not the best tool for the project manager to use.

D Parametric estimating

Correct. Parametric estimating is the best technique to use when the information available about the current project is coupled with the historical information from the previous project.

Reference:

A Guide to the Project Management Body of Knowledge, (PMBOK® Guide) – Sixth Edition, Project Management Institute Inc., 2017, Page(s) 244

PMP Exam 4

Filtered Mode: Displaying 200 questions

Question 23 of 200
Question ID: 613417
A project manager is nearing the end of a product development project for a large consumer goods manufacturer. Several vendors produced key deliverables for the project, and there are no open claims. The project manager is now carrying out all of the activities associated with project closure and is following all project management best practices.

Which of the following tasks should the project manager perform?

A Close procurements with the vendors

B Formally sign off the project deliverables

C Update the enterprise environmental factors

D Update the organizational process assets

Question answered incorrectly

Hint:
How are the finalized project documents and materials archived?

Correct Answer: D

Explanation:

The question indicates that the Close Project or Phase process is underway. During project closure, the organizational process assets are updated to include finalized project documents, operational and support documents, project or phase closure documents, and the lessons learned repository. Therefore, of the available choices, updating the organizational process assets is the best answer to the question asked.

Details for Each Option:

A Close procurements with the vendors

Incorrect. Procurements are closed as part of the Control Procurements process, not the Close Project or Phase process which is, as implied by the question, the process being carried out in the scenario.

B Formally sign off the project deliverables

Incorrect. Deliverables that meet the acceptance criteria are formally signed off and approved by the customer or sponsor as part of the Validate Scope process rather than the Close Project or Phase process. In the Close Project or Phase process, the project manager 'confirms' the delivery and formal acceptance of the deliverables. While the difference is subtle, formal acceptance and the confirmation of the acceptance are two different things. One can think of the confirmation of acceptance as a checkbox that should be ticked during project closure: "Have the deliverables been formally accepted during the Validate Scope process?" If Yes, check the box. If No, there is a problem.

C Update the enterprise environmental factors

Incorrect. The question implies the Close Project or Phase process is being carried out in the scenario. Updates to the enterprise environmental factors are not among the outputs of this process.

D Update the organizational process assets

Correct. Organizational process assets (OPAs) updates are among the outputs of the Close Project or Phase process described in the scenario. The updates to the OPAs may include finalized project documents, operational and support documents, project or phase closure documents, and the lessons learned repository.

Reference:

A Guide to the Project Management Body of Knowledge, (PMBOK® Guide) – Sixth Edition, Project Management Institute Inc., 2017, Page(s) 127-128

PMP Exam 4

Filtered Mode: Displaying 200 questions

Question 24 of 200
Question ID: 626019
You are managing a project that encounters many changes. A stakeholder approaches you asking about the status of a change request that they have recently submitted.

What is your best course of action to address the stakeholder's inquiry?

A Consult the project change management plan

B Ask the stakeholder to read the latest project status report

C Consult the project change log

D Send the stakeholder to talk to the project team

Question answered incorrectly

Hint:
What project document contains the most up-to-date information about the change requests and their statuses?

Correct Answer: C

Explanation:

A change log is a project document that contains information about changes that occur during the project. The change log is updated as new information about a change request becomes available. For example, if a change request has been approved (or rejected) by the change control board, the status of this change request should be updated accordingly. It is the project manager's responsibility to make sure that the information in the change log is up-to-date and communicated to the stakeholders. Therefore, when asked about the status of a change request, the project manager should consult the change log and communicate the status to the stakeholder.

Details for Each Option:

A Consult the project change management plan

Incorrect. Change management plan is a document that provides information on how changes will be monitored and controlled. It does not have information about the individual change requests and their statuses.

B Ask the stakeholder to read the latest project status report

Incorrect. While the project status report may include information about the status of the change requests, this information may be not up-to-date. From the moment the project status report has been published, the status of any change request can change. For example, a change control board has just approved (or rejected) a change request that was in status 'submitted' in the latest project status report.

C Consult the project change log

Correct. A change log is a project document that stores information about changes that occur during the project and their statuses. When a project is properly managed, the changes are logged, and their statuses are updated in a timely manner.

D Send the stakeholder to talk to the project team

Incorrect. Although project team members may know about the status of a change request, sending the stakeholder to the team will likely interrupt the team's work. Also, the project team itself is not necessarily involved in executing all approved change requests. It's the project manager's responsibility to communicate with the stakeholders and let the team do their work with as few interruptions as possible.

Reference:

A Guide to the Project Management Body of Knowledge, (PMBOK® Guide) – Sixth Edition, Project Management Institute Inc., 2017, Page(s) 120

PMP Exam 4

Filtered Mode: Displaying 200 questions

Question 25 of 200
Question ID: 612471
A project manager is leading a software upgrade project and is just starting the Plan Stakeholder Engagement process. The newest member of the team has limited experience working on projects and wants to understand the process carried out by the project manager.

How should the project manager respond to the team member?

A Communicating with stakeholders to meet their needs, address issues, and foster their involvement

B Identifying stakeholders and analyzing their interests, influence, and potential impact on project success

C Monitoring stakeholder relationships and engaging them through the modification of strategies and plans

D Developing approaches to involve stakeholders based on their needs and potential impact on the project

Question answered incorrectly

Hint:
Which response represents an action that takes place during project planning?

Correct Answer: D

Explanation:

Plan Stakeholder Engagement is the process of developing approaches to involve project stakeholders, based on their needs, expectations, interests, and potential impact on the project. The incorrect answer choices are the definitions of the other project management processes involving stakeholders.

Details for Each Option:

A Communicating with stakeholders to meet their needs, address issues, and foster their involvement

Incorrect. This answer choice describes the Manage Stakeholder Engagement process.

B Identifying stakeholders and analyzing their interests, influence, and potential impact on project success

Incorrect. This answer choice describes the Identify Stakeholders process.

C Monitoring stakeholder relationships and engaging them through the modification of strategies and plans

Incorrect. This answer choice describes the Monitor Stakeholder Engagement process.

D Developing approaches to involve stakeholders based on their needs and potential impact on the project

Correct. Plan Stakeholder Engagement is the process of developing approaches to involve project stakeholders, based on their needs, expectations, interests, and potential impact on the project. Of the choices provided, this option best describes the Plan Stakeholder Engagement process and is, therefore, the best answer to the question asked.

Reference:

A Guide to the Project Management Body of Knowledge, (PMBOK® Guide) – Sixth Edition, Project Management Institute Inc., 2017, Page(s) 516

PMP Exam 4

Filtered Mode: Displaying 200 questions

Question 26 of 200
Question ID: 612691
You are performing activities necessary to close out the second phase of a multi-phase project. The project documents of this phase indicate that the planned risk responses to several of the realized risks were found to be ineffective.

What should you do next before moving to the next phase of your project?

A Increase the management reserves allocated to the third phase

B Update the risk management plan for the third phase

C Submit a change request to update the lessons learned register

D Transfer the knowledge gained to the lessons learned repository

Question answered incorrectly

Hint:
What should be done with knowledge gained during the project after the project documents have been finalized?

Correct Answer: D

Explanation:

The question implies that the Close Project or Phase process of the second phase of the project is being carried out. The lessons learned register is a project document used to record knowledge gained during a project (or phase) so that it can be used in the current project and entered into the lessons learned repository at the end of the project or phase. The question indicates that the knowledge gained came from the project documents of the current phase, which suggests that the knowledge was previously captured in the lessons learned register. As part of the Close Project or Phase process, the information from the lessons learned register should be transferred to the lessons learned repository which is what you should do before moving to the next phase of your project.

Details for Each Option:

A Increase the management reserves allocated to the third phase

Incorrect. Management reserves are a specified amount of the project budget withheld for management control purposes and are reserved for unforeseen work that is within the scope of the project. A project manager needs an approved change request to increase the management reserves. Also, increasing the management reserves for a subsequent phase based on the ineffective risk responses of a previous phase is not good project management practice.

B Update the risk management plan for the third phase

Incorrect. While updating the risk management plan for the third phase is a plausible option, it is not the next step for you to take. First, all activities associated with the closure of the second phase should be completed. Even then, the next phase of the project does not start with the development or update of the risk management plan. Additionally, risk responses for particular risks are specified in the risk register, not in the risk management plan.

C Submit a change request to update the lessons learned register

Incorrect. The lessons learned register is a project document that is not typically subject to a formal change control process. While the lessons learned register might be updated as part of the process described in the scenario, no change request is required to update this document.

D Transfer the knowledge gained to the lessons learned repository

Correct. The lessons learned repository is a store of historical information about lessons learned from projects. As part of the Close Project or Phase process, the information from the lessons learned register could be transferred to the lessons learned repository.

Reference:

A Guide to the Project Management Body of Knowledge, (PMBOK® Guide) – Sixth Edition, Project Management Institute Inc., 2017, Page(s) 128

PMP Exam 4

Filtered Mode: Displaying 200 questions

Question 27 of 200
Question ID: 612717
A project sponsor creates a draft of the project charter and asks you to complete its development and lead the project.

What should you do next?

A Gather information from stakeholders to document high-level details on the project

B Determine whether the expected outcomes of the project justify the required investment

C Create a document that describes how the project will be executed, monitored, controlled, and closed

D Develop a document that describes how and when the benefits of the project will be delivered

Question answered incorrectly

Hint:
Which of the answer choices represent a tool or technique of the Develop Project Charter process?

Correct Answer: A

Explanation:

You are requested by the project sponsor to complete the development of the project charter and to lead the project. This implies you have been assigned as a project manager (even though the project charter has not yet been approved). Since you have been assigned to the project, it has been determined that the project will contribute to the company's business goals. The next step would be chartering the project. The project charter is the document that formally authorizes the project manager to apply organizational resources to project activities and is an essential document for project success. Gathering data from stakeholders to obtain information on high-level requirements, assumptions, constraints, approval criteria, and other information is one of the techniques used when developing the project charter and therefore, the next thing you should do.

Details for Each Option:

A Gather information from stakeholders to document high-level details on the project

Correct. A document with high-level details on the project would be the project charter. The project charter is the document that formally authorizes the project and provides the project manager with the authority to apply organizational resources to project activities. Gathering information from stakeholders is one of the techniques used to develop the project charter and is, therefore, what you should do next.

B Determine whether the expected outcomes of the project justify the required investment

Incorrect. The business case describes the necessary information to determine whether the expected outcomes of the project justify the required investment. The business case is developed before the project and commonly used as an input to create the project charter. Since you have already been assigned to the project, it is reasonable to assume that the business case would have been already completed. Therefore, this choice is not the best answer to the question asked.

C Create a document that describes how the project will be executed, monitored, controlled, and closed

Incorrect. A document that describes how the project will be executed, monitored, controlled, and closed is the project management plan. This plan is developed during project planning, while according to the scenario, the project is in initiation.

D Develop a document that describes how and when the benefits of the project will be delivered

Incorrect. The benefits management plan is the document that describes how and when the benefits of the project will be delivered. The benefits management plan is developed early in the project life cycle and is one of the business documents commonly used to create the project charter. You have been assigned as a project manager, therefore, one may assume the benefits management plan has already been completed, making this choice an incorrect answer.

Reference:

A Guide to the Project Management Body of Knowledge, (PMBOK® Guide) – Sixth Edition, Project Management Institute Inc., 2017, Page(s) 80, 77, 30-33

PMP Exam 4

Filtered Mode: Displaying 200 questions

Question 28 of 200
Question ID: 610053
Your project to produce a new vending machine is almost over, and you are now in the process of handing over the product to the operations team. You are meeting with the company president who initiated the project and with operations senior managers to demonstrate the vending machine functionality.

Which of the following is most important for you to achieve when meeting with these individuals?

A Understanding of the specific features of the vending machine

B Confirming the formal acceptance of the vending machine

C Getting support from operations management

D Being recognized for project completion

Question answered incorrectly

Hint:
Fulfill the expectations of the project stakeholders.

Correct Answer: B

Explanation:

The question implies you are in the Close Project or Phase process. One of the activities associated with this process is to confirm the delivery and formal acceptance of the project deliverables from the relevant project stakeholders. In this case, the project has been initiated by the company president. Therefore, of the choices provided, obtaining final formal acceptance of the project deliverables is what you should achieve when meeting with the president and operations management. Note, the final acceptance should be obtained from the president and not from the operations management. However, as we frequently mention, the correct answer is not always the ideal answer that you would like to see among the choices available. For an answer to be correct, it should be just a little better than the others.

Details for Each Option:

A Understanding of the specific features of the vending machine

Incorrect. While an understanding of the vending machine functionality is important to the operations team to operate the machine when it is deployed in production, the question states that the meeting is conducted with the company president and the operations senior management. It is reasonable to assume that these individuals are more interested in the overall functionality rather than in specific features of the product. Therefore, this choice is not the best answer to the question asked.

B Confirming the formal acceptance of the vending machine

Correct. A key component of closing a project is confirming the delivery and formal acceptance of the project deliverable from relevant stakeholders. Since the company president commissioned the project and is, therefore, a key stakeholder, you should confirm their acceptance of the final output during the Close Project or Phase process implied by the scenario.

C Getting support from operations management

Incorrect. While obtaining support from operations management will benefit the project while transferring the new vending machine to operations, of the choices given, support from operations management is not the most important thing you need to achieve during the meeting described in the scenario.

D Being recognized for project completion

Incorrect. Although you may be seeking recognition from the company president for completing the project, recognition for project completion can be made later, after the project is formally closed, and is, therefore, not the most important thing to be achieved in the scenario, making this choice an incorrect answer.

Reference:

A Guide to the Project Management Body of Knowledge, (PMBOK® Guide) – Sixth Edition, Project Management Institute Inc., 2017, Page(s) 123

PMP Exam 4

Filtered Mode: Displaying 200 questions

Question 29 of 200
Question ID: 626010
You have developed a project schedule, but the project completion date falls beyond the deadline defined by the project sponsor. You explained this situation to the sponsor and asked them to provide you with additional funds to bring in more people, but the sponsor refused.

What can you do to shorten the project duration?

A Crash the project

B Fast track the project

C Apply resource leveling

D Do nothing

Question answered incorrectly

Hint:
Which tool or technique may help in shortening the project duration without applying additional resources?

Correct Answer: B

Explanation:

Fast tracking is a schedule compression technique that can be used during the Develop Schedule process. In this technique, activities on the critical path that were planned to be performed sequentially are performed in parallel for some or all of their duration, thus shortening the overall project length. While no additional resources are required while applying fast tracking, the project manager should be aware that fast tracking may result in rework and an increased risk.

Details for Each Option:

A Crash the project

Incorrect. Crashing the project requires additional resources. The project sponsor refused to provide funds to bring in more people.

B Fast track the project

Correct. Fast tracking is a schedule compression technique in which critical path project activities that were planned to be executed sequentially are performed in parallel resulting in a shorter project duration.

C Apply resource leveling

Incorrect. Resource leveling usually increases the project duration.

D Do nothing

Incorrect. Doing nothing knowing that the project will not be completed on time is not a responsible choice of project manager.

Reference:

A Guide to the Project Management Body of Knowledge, (PMBOK® Guide) – Sixth Edition, Project Management Institute Inc., 2017, Page(s) 215

PMP Exam 4

Filtered Mode: Displaying 200 questions

Question 30 of 200
Question ID: 612011
The project management plan and the performance measurement baseline have been approved. As you monitor the project's progress, you realize the approved budget is limiting the project and will affect the targeted completion date. This constraint could affect the company's success in the new venture.

What is your best course of action?

A Use the contingency reserves

B Use the management reserves

C Cut costs on the project to stay within the budget

D Ask for a change in the budget

Question answered incorrectly

Hint:
A project manager needs to take appropriate actions to meet the project's objectives which likely will assist the company in achieving its strategic goals.

Correct Answer: D

Explanation:

As the project manager, you are ultimately responsible for the project as a whole and its success. You are also the one that has the overall view of the project. The scenario suggests the project budget is limiting the project's ability to meet the targeted completion date. While staying within budget is one of your responsibilities, you also need to make integrated decisions and act to ensure the project's objectives are met and remains aligned with the business plan and the benefits management plan. By deciding to ask for a budget increase so that the completion date can be met, rather than trying to cut costs to stay within the budget, you are contributing toward a successful launch into a new area of retail, which is one of the company's strategic goals. Obviously, an approved change request will be required to change the project budget.

Details for Each Option:

A Use the contingency reserves

Incorrect. Contingency reserves are allocated for known risks that have been specifically identified during risk analysis. Since the contingency reserves are included in the budget, using them would not increase the funding for the project and therefore is not your best course of action.

B Use the management reserves

Incorrect. Management reserves are additional funds to cover unforeseen risks that could impact the project. These reserves are 'not' included in the cost baseline but are part of the approved cost budget. An approved change request is required to utilize management reserves and, therefore, cannot be used at the project manager's discretion. Since the management reserves are included in the budgeted amount, using them would not increase the funding for the project.

C Cut costs on the project to stay within the budget

Incorrect. The scenario suggests the current budget is a constraint to the project and that increased funding is required to meet the objectives. While staying within budget is one of your responsibilities as the project manager, you also need to make integrated decisions and act to ensure both the project's and the company's objectives are met. Your project contributes to the company's strategic goal of entering a new area of retail, therefore, by trying to cut costs to stay within budget, the company might miss one of its strategic goals.

D Ask for a change in the budget

Correct. The scenario suggests you find the budget is a constraint that could hinder the company's realization of one of their strategic goals. By asking for a change in the budget, you increase the chances of the company's successful launch into a new area of retail. As the project manager, you are responsible for the success of the project. Therefore, you need to monitor the project's progress and act to meet the project's objectives and ultimately the company's goals.

Reference:

A Guide to the Project Management Body of Knowledge, (PMBOK® Guide) – Sixth Edition, Project Management Institute Inc., 2017, Page(s) 72

PMP Exam 4

Filtered Mode: Displaying 200 questions

Question 31 of 200
Question ID: 613622
You have just completed the Collect Requirements process with a group of senior executives and your team. You begin developing the scope statement and realize that you need more clarification on a specific component of the deliverable.

What document should you reference to find the person who requested the specific component?

A Stakeholder engagement assessment matrix

B Responsibility assignment matrix (RAM)

C RACI chart

D Requirements traceability matrix

Question answered incorrectly

Hint:
There are two outputs to the Collect Requirements process. One is the requirements documentation. What is the other output?

Correct Answer: D

Explanation:

Part of the Collect Requirements process is to link product requirements from their origin (including the person who requested the requirement) to the deliverables that satisfy them. Attributes, including source, associated with each requirement are recorded in the requirements traceability matrix. You may need to contact the person (or source) who requested the requirement to clarify the specifications for the scope statement, as in this scenario, but also in cases where the stakeholder should be informed a deliverable they expected may need to be eliminated, changed or delayed.

Details for Each Option:

A Stakeholder engagement assessment matrix

Incorrect. The stakeholder engagement assessment matrix is typically used in the Plan Stakeholder Engagement process to compare current and desired stakeholder engagement levels required for successful project delivery. It does not indicate who requested a requirement.

B Responsibility assignment matrix (RAM)

Incorrect. RAM is a general term for a grid that shows what project resources are assigned to each work package. RAM illustrates connections between work packages, or activities and project team members. It does not indicate who requested a requirement.

C RACI chart

Incorrect. A RACI chart is a common type of RAM that defines the involvement of stakeholders and team members with responsible, accountable, consult and inform statuses for project activities. It does not indicate who requested a requirement.

D Requirements traceability matrix

Correct. The requirements traceability matrix links product requirements from their origin to the deliverables that satisfy them. It identifies the person (or source) who originally requested the requirement. You can then contact them to get more details about the specific requirement.

Reference:

A Guide to the Project Management Body of Knowledge, (PMBOK® Guide) – Sixth Edition, Project Management Institute Inc., 2017, Page(s) 148-149

PMP Exam 4

Filtered Mode: Displaying 200 questions

Question 32 of 200
Question ID: 612565
A project management plan has been approved, and the project is now in execution. The project manager would like to communicate project status to the stakeholders.

Which of the following should the project manager send to stakeholders to achieve her immediate goal?

A Work performance report

B Work performance data

C Communications management plan

D Project management plan

Question answered incorrectly

Hint:
Which answer choice represents the physical or electronic representation of work performance information compiled in project documents, intended to generate decisions, actions, or awareness?

Correct Answer: A

Explanation:

Project reporting is the act of collecting and distributing project information. Project information is distributed to various groups of stakeholders and should be in a form to provide information at an appropriate level, detail, and format for the stakeholders. Work performance reports are the physical or electronic representation of work performance information compiled in project documents, intended to generate decisions, actions, or awareness. Work performance reports would allow the project manager to communicate the project status to the stakeholders.

Details for Each Option:

A Work performance report

Correct. The act of collecting and distributing project information to groups of stakeholders is known as project reporting. To complete the project reporting, the work performance reports, which contain the work performance data that is collected during execution and analyzed and put into context during the Monitor and Control Project Work process, should be sent to the stakeholders.

B Work performance data

Incorrect. Work performance data are the raw observations and measurements collected while project activities are being performed. Work performance data is not in a useful or appropriate form until it is analyzed in the various controlling processes to create work performance reports.

C Communications management plan

Incorrect. The communications management plan is a component of the project management plan that describes how project communications will be planned, structured, implemented, and monitored for effectiveness. The plan does not contain information on project performance.

D Project management plan

Incorrect. The project management plan is the document that describes how the project will be executed, monitored and controlled, and closed. The plan does not have project performance information that would help the stakeholders to understand the status of the project.

Reference:

A Guide to the Project Management Body of Knowledge, (PMBOK® Guide) – Sixth Edition, Project Management Institute Inc., 2017, Page(s) 382, 385, 112

PMP Exam 4

Filtered Mode: Displaying 200 questions

Question 33 of 200
Question ID: 613704
The project team that you are managing is entirely virtual and distributed all over the country. You know that as the project progresses, your team will learn things and gather more information about the project. You would like to ensure all that knowledge and information does not get lost. By managing project knowledge, you can improve current project outcomes as well as support future projects.

Which of the following will you need to remember when managing knowledge on this project?

A Managing project knowledge only involves documenting information so it can be shared.

B Managing project knowledge only involves obtaining lessons learned.

C Explicit knowledge can be easily shared but isn't always understood correctly.

D Tacit knowledge is easy to organize and index.

Question answered incorrectly

Hint:
The information contained in lessons learned is an example of explicit knowledge.

Correct Answer: C

Explanation:

Knowledge is commonly split into two forms. Tacit knowledge is personal and hard to express. It involves the collective know-how, techniques, and expertise gained from one's experiences. Tacit knowledge is difficult to organize and is typically shared through conversations and interactions between people. Explicit knowledge can be expressed in words, numbers, and symbols and therefore can be easily documented and shared. However, explicit knowledge lacks context and is open to different interpretations making it been easily misunderstood. You need to remember this drawback of using only explicit knowledge in order to effectively manage knowledge on this project. You need to take actions, such as building an atmosphere of trust so that people are motivated to share their knowledge, to reduce the risk of relying only on explicit knowledge.

Details for Each Option:

A Managing project knowledge only involves documenting information so it can be shared.

Incorrect. Managing project knowledge is not limited to only documenting explicit knowledge and information so it can be shared. Rather, managing project knowledge is concerned with managing 'both' explicit and tacit knowledge. While explicit knowledge can be expressed in words, numbers, and symbols allowing it to be easily documented as information, explicit knowledge lacks context and can be misunderstood. Therefore, only documenting information is not enough.

B Managing project knowledge only involves obtaining lessons learned.

Incorrect. Managing project knowledge is concerned with managing both tacit and explicit knowledge. Lessons learned, an example of explicit knowledge, can be easily documented. Without context, however, lessons learned can be misunderstood; therefore, there is more involved in managing project knowledge than recording lessons learned.

C Explicit knowledge can be easily shared but isn't always understood correctly.

Correct. Explicit knowledge can be expressed in words, numbers, and symbols and therefore can be easily documented. Explicit knowledge, however, lacks context and is open to different interpretations. Consequently, it can be easily misunderstood.

D Tacit knowledge is easy to organize and index.

Incorrect. Tacit knowledge resides in the minds of people and is best shared through conversations and interactions between people. This type of knowledge, such as beliefs and experience, is personal and difficult to express, organize, and index.

Reference:

A Guide to the Project Management Body of Knowledge, (PMBOK® Guide) – Sixth Edition, Project Management Institute Inc., 2017, Page(s) 100

PMP Exam 4

Filtered Mode: Displaying 200 questions

Question 34 of 200
Question ID: 613502
You are managing a project to produce new smartwatches. Several inspections have been conducted during the manufacturing process, and defects of various types have been detected. You want to document these defects in a way that will specify how many defects of each type were found per inspection.

Which tool is the best to use in this situation?

A Control charts

B Check sheets

C Scatter diagrams

D Pareto diagrams

Question answered incorrectly

Hint:
This tool can be in the form of a matrix where rows represent various types of defects, and columns represent inspections conducted on different days.

Correct Answer: B

Explanation:

The scenario suggests you are performing the Control Quality process. Check sheets are an example of a data gathering techniques that can be used as part of this process. A check sheet can be used to gather data, such as quality problems uncovered during inspections, as well as to document how often a particular defect occurs. Check sheets can be used to organize facts in a manner that facilitate the effective collection of data about a potential quality problem. A check sheet can be in the form of a matrix where rows represent various types of defects, and columns represent inspections conducted on different days. This description accurately addresses the question asked, making check sheets the best tool to use in the situation presented in the scenario.

Details for Each Option:

A Control charts

Incorrect. Control charts are used to determine whether a process is stable or has predictable performance rather than document the type and the frequency of defects.

B Check sheets

Correct. A check sheet, also known as a tally sheet, can be used to gather data, such as quality problems uncovered during inspections, as well as to document how often a particular defect occurs.

C Scatter diagrams

Incorrect. A scatter diagram is a graph that shows the relationship between two variables. According to the scenario, you want to document defects in a way that will specify how many defects of each type were found per inspection. A scatter diagram does not provide this information.

D Pareto diagrams

Incorrect. A Pareto diagram is a type of histogram where data is presented with relative frequencies of each specified cause listed in the horizontal axis decreasing in magnitude. This is done to identify vital few sources that are responsible for causing most of the problem's effects. The Pareto diagram is typically used in root cause analysis to help identify which root causes are resulting in the most problems. Since the scenario does not require to identify root causes, the Pareto diagram is not the best answer to the question asked.

Reference:

A Guide to the Project Management Body of Knowledge, (PMBOK® Guide) – Sixth Edition, Project Management Institute Inc., 2017, Page(s) 302

PMP Exam 4

Filtered Mode: Displaying 200 questions

Question 35 of 200
Question ID: 612788
You have just been assigned to a new project which will begin in the near future. The project sponsor has informed you that this project will require rigorous change control.

When will you develop the change management plan?

A Along with the processes of the Initiating Process Group

B As part of the Develop Project Management Plan process

C As an output of the Plan Change Management process

D During the Perform Integrated Change Control process

Question answered incorrectly

Hint:
The change management plan is created as part of project planning.

Correct Answer: B

Explanation:

The change management plan is a component of the project management plan that establishes the change control board, documents the extent of its authority, and describes how the change control system will be implemented. Most components of the project management plan are produced as the output from other processes, but the change management plan is created as part of the Develop Project Management Plan process.

Details for Each Option:

A Along with the processes of the Initiating Process Group

Incorrect. The Initiating Process Group includes the Develop Charter process and the Identify Stakeholders process. The change management plan is developed as part of the

Planning Process Group and not the Initiating Process Group.

B As part of the Develop Project Management Plan process

Correct. The change management plan is a component of the project management plan and is developed as part of the Develop Project Management Plan process.

C As an output of the Plan Change Management process

Incorrect. 'Plan Change Management' is not a process specified in the PMBOK® Guide.

D During the Perform Integrated Change Control process

Incorrect. The change management plan is a critical input into the Perform Integrated Change Control process and must be completed before this process can be executed. The change management plan is created during project planning rather than during the Perform Integrated Change Control process which occurs later in the project as part of the Monitoring and Controlling Process Group.

Reference:

A Guide to the Project Management Body of Knowledge, (PMBOK® Guide) – Sixth Edition, Project Management Institute Inc., 2017, Page(s) 88

PMP Exam 4

Filtered Mode: Displaying 200 questions

Question 36 of 200
Question ID: 612350
A project manager has just completed the development of the project management plan and now needs the plan to be reviewed and signed off by the key stakeholders.

What should the project manager do to find the names of these individuals?

A Check the lessons learned repository

B Review project documents

C Contact the human resources department

D Ask the project sponsor

Question answered incorrectly

Hint:
What is the best source of information regarding the identification, assessment, and classification of project stakeholders?

Correct Answer: B

Explanation:

Ideally, the correct answer could have been worded as, “Review the stakeholder register.” However, this option is not provided. Instead, a wider term, ‘project documents’, is used. Project documents are not part of the project management plan; however, along with the project management plan, they are necessary to manage the project effectively. The stakeholder register is among the project documents. It should have been created as part of the Identify Stakeholders process during project initiation. The stakeholder register is a project document which includes the identification, assessment, and classification of project stakeholders. Since, according to the scenario described, the functional leaders are involved in the project, they are considered project stakeholders. Thus, the stakeholder register should list the names of the project sponsor and functional leaders. Therefore, to find the names of those relevant stakeholders that need to be invited to the meeting, the project manager should review the project documents.

Details for Each Option:

A Check the lessons learned repository

Incorrect. The lessons learned repository may or may not have information from past projects regarding the approval of the project management plan. However, this information will not likely have the current roles and responsibilities of key stakeholders.

B Review project documents

Correct. A stakeholder register is one of the project documents. The stakeholder register includes the identification, assessment, and classification of project stakeholders. The project manager should review the stakeholder register to determine who are the relevant stakeholders that need to attend the meeting and invited them as necessary.

C Contact the human resources department

Incorrect. The human resource department may have contact information for the identified stakeholders. However, the department is unlikely to have the information on 'who' the stakeholders are for this (or any other) project.

D Ask the project sponsor

Incorrect. The project sponsor may be aware of the names of individuals associated with the identified roles. However, this is not a good use of time nor is the project sponsor the best source for this information. The project manager should use the resources which are already available whenever possible.

Reference:

A Guide to the Project Management Body of Knowledge, (PMBOK® Guide) – Sixth Edition, Project Management Institute Inc., 2017, Page(s) 514, 88-89; see also Project Management Professional (PMP)® Examination Content Outline, Project Management Institute Inc., June 2015, Domain 2, Task 11

PMP Exam 4

Filtered Mode: Displaying 200 questions

Question 37 of 200
Question ID: 613656
A project manager is provided a fixed budget, but the cost estimates for the equipment required for the project were 30% higher than expected.

What would be the best technique to find alternatives that can be presented to the project sponsors for consideration to lower the cost and meet their budget?

A Plan cost management

B Value engineering

C Fishbone diagram

D Basis of estimates

Question answered incorrectly

Hint:
When assessing cost, think of inherent or intrinsic worth.

Correct Answer: B

Explanation:

As the project manager, you look for ways to optimize the value of the project, especially working with cost constraints. Value engineering (also known as value analysis) is an example of product analysis, a technique used in the Define Scope process, which is described in the question. Value engineering is a way to look in-depth at all project elements (in this case, equipment) to improve cost efficiencies without loss of performance. Two of the answer choices, the plan cost management and the basis of estimates, can be eliminated because they are not techniques. Fishbone diagram can be eliminated because the technique focuses on the root causes of a problem and does not assess the value of individual elements of a project. Therefore, of the choices provided, value engineering is considered the best answer to the question asked.

Details for Each Option:

A Plan cost management

Incorrect. Plan cost management is not a technique, but a component of the project management plan that describes the approach to the project's cost management.

B Value engineering

Correct. Value engineering is a type of product analysis technique that "supports cost reduction activities by relating the cost of individual components to their function contributions."

C Fishbone diagram

Incorrect. A fishbone diagram (also known as a cause-and-effect diagram) is a technique that illustrates the causes of a problem in separate branches which help determine the main cause of the issue. It does not evaluate the value of a project's components nor consider alternatives.

D Basis of estimates

Incorrect. The basis of estimates is not a technique, but a project document with details on how estimates were derived.

Reference:

A Guide to the Project Management Body of Knowledge, (PMBOK® Guide) – Sixth Edition, Project Management Institute Inc., 2017, Page(s) 153

PMP Exam 4

Filtered Mode: Displaying 200 questions

Question 38 of 200
Question ID: 613618
You are finalizing your project. As you start this process, you need to gain a clear understanding of the project's approval requirements and who will sign off on the project.

What should you do to find this information?

A Review the project charter

B Check the business case

C Consult the benefits management plan

D Review the responsibility assignment matrix (RAM)

Question answered incorrectly

Hint:
What project document is issued by the sponsor and formally authorizes the existence of the project?

Correct Answer: A

Explanation:

The Close Project or Phase is the process described in the question. The project charter is one of the inputs used in the Close Project or Phase process. The project charter documents the project success criteria, the approval requirements, and who will sign off on the project. The project charter is the document that is most useful in this scenario, and reviewing this document is what you should do.

Details for Each Option:

A Review the project charter

Correct. The project charter documents the project success criteria, the approval

requirements, and who will sign off on the project.

B Check the business case

Incorrect. The business case is a document that outlines the business need and the cost-benefit analysis that justifies the project. The business case does not contain information on approval requirements or who will sign off on the project.

C Consult the benefits management plan

Incorrect. The benefits management plan outlines the target benefits that justify the project, but it does not document the approval requirements or who will sign off on the project.

D Review the responsibility assignment matrix (RAM)

Incorrect. The responsibility assignment matrix (RAM) is a grid that shows the project resources assigned to each work package. The RAM does not contain the project success criteria, the approval requirements, or who will sign off on the project.

Reference:

A Guide to the Project Management Body of Knowledge, (PMBOK® Guide) – Sixth Edition, Project Management Institute Inc., 2017, Page(s) 124

PMP Exam 4

Filtered Mode: Displaying 200 questions

Question 39 of 200
Question ID: 610020
As you are monitoring the cost baseline for your project, you notice that project expenses are higher than expected at this point in the project.

What is the most likely cause of the variance?

A Overestimated material costs

B Lack of stakeholder support

C An incomplete milestone list

D Excess inventory

Question answered incorrectly

Hint:
Proper physical resource management is necessary for successful completion of a project.

Correct Answer: D

Explanation:

Physical resource management is concentrated in allocating and using the physical resources such as materials, equipment, and supplies efficiently and effectively. Organizations should have data on how much inventory to keep on hand as the project progresses. Failing to manage and control resources efficiently can be a source of increased costs in a project. In the scenario described, you have determined expenses are higher than expected. One of the causes for increased costs is failing to maintain appropriate levels of inventory. Too much stock on hand may result in realizing the expenses for those supplies before they were expected when comparing against the cost baseline.

Details for Each Option:

A Overestimated material costs

Incorrect. Estimating material costs is completed as part of Project Cost Management to develop a project budget. Overestimating material costs would lead to a higher approved budget and, therefore, a higher cost baseline, i.e., a smaller variance, and would not cause increased expenses.

B Lack of stakeholder support

Incorrect. While stakeholder support is essential for the success of a project, it is hard to find the direct correlation between the stakeholder support and higher than expected project expenses. Another answer choice better addresses the question asked.

C An incomplete milestone list

Incorrect. A milestone list is a project document that identifies all project milestones. The existence or lack of a milestone list would unlikely cause project expenses to be higher than expected.

D Excess inventory

Correct. Keeping too much inventory may result in high operational costs and higher expenses. The increased cost of additional supplies could cause a deviation from the cost baseline.

Reference:

A Guide to the Project Management Body of Knowledge, (PMBOK® Guide) – Sixth Edition, Project Management Institute Inc., 2017, Page(s) 310

PMP Exam 4

Filtered Mode: Displaying 200 questions

Question 40 of 200
Question ID: 612192
While reviewing the quality management plan, you notice that the cost of quality specified in the plan includes a wrong component.

Which component did you likely notice?

A Change costs

B Appraisal costs

C Failure costs

D Prevention costs

Question answered incorrectly

Hint:
One of the answer choices is a made up term.

Correct Answer: A

Explanation:

The quality management plan is the main output of the Plan Quality Management process. As part of this process, the cost of quality associated with the project can be determined to reflect the appropriate balance for investing in the cost of prevention and appraisal to avoid failure costs. Cost of quality is an example of the data analysis technique that is associated with this process. The cost of quality includes prevention costs, appraisal costs, and failure costs. 'Change costs' are not specified by the *PMBOK® Guide* as a component of the cost of quality and is, therefore, the wrong component you likely noticed while reviewing the quality management plan.

Details for Each Option:

A Change costs

Correct. 'Change costs' are not a recognized component of the cost of quality. Therefore, including an unrecognized element in the cost of quality is most likely the identified problem.

B Appraisal costs

Incorrect. Appraisal costs are costs related to evaluating, measuring, auditing, and testing the products, deliverables, or services of the specific project. Appraisal costs are included in the cost of quality.

C Failure costs

Incorrect. Failure costs are costs related to nonconformance of the products, deliverables, or services to the needs or expectations of the stakeholders. Failure costs are an element of the cost of quality.

D Prevention costs

Incorrect. Prevention costs are costs related to the prevention of poor quality in the products, deliverables, or services of the specific project. Prevention costs should be included in the cost of quality.

Reference:

A Guide to the Project Management Body of Knowledge, (PMBOK® Guide) – Sixth Edition, Project Management Institute Inc., 2017, Page(s) 282

PMP Exam 4

Filtered Mode: Displaying 200 questions

Question 41 of 200
Question ID: 612453
You are leading a project team with the development of the stakeholder engagement plan. Using a data representation technique, you have created the diagram below, and you are sharing it with your team.

How might you explain the purpose of this diagram?

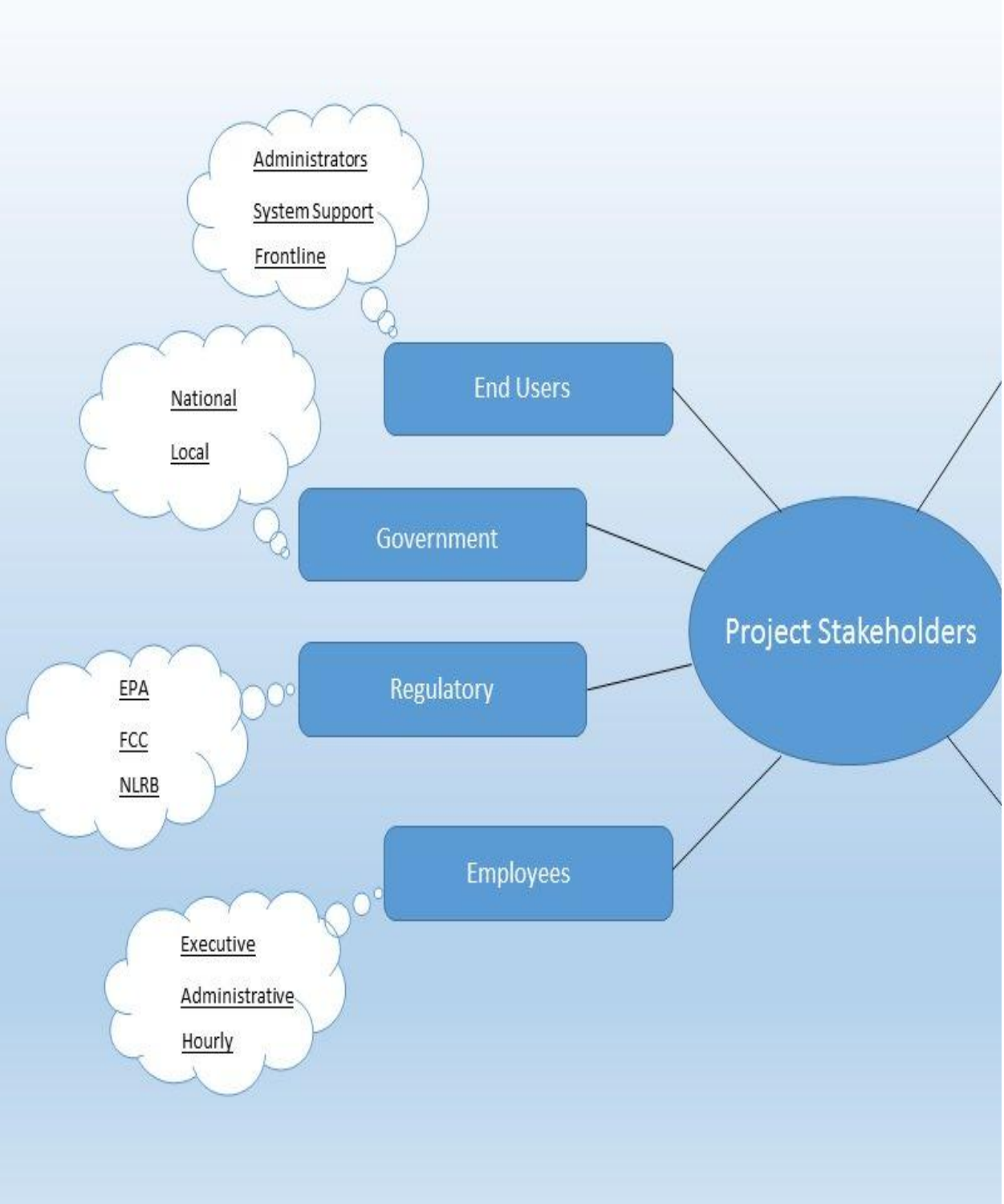

A Visually organizes information about stakeholders and their relationship to each other and the organization

B Supports comparison between the current engagement levels of stakeholders and the

desired engagement levels

C Identifies underlying reasons for the level of support of project stakeholders

D Displays results of stakeholder analysis comparing to other organizations or other projects that are considered to be world class

Question answered incorrectly

Hint:
Which answer choice describes the data representation technique of mind mapping?

Correct Answer: A

Explanation:

The question states that the project team is developing the stakeholder engagement plan, which suggests that the Plan Stakeholder Engagement process is being performed. The diagram presented in the question is an example of a data representation technique referred to as mind mapping, which may be used during the Plan Stakeholder Engagement process. Mind mapping is used to visually organize information about stakeholders and their relationship to each other and the organization.

Details for Each Option:

A Visually organizes information about stakeholders and their relationship to each other and the organization

> *Correct. The diagram presented in the question is an example of a data representation technique referred to as mind mapping. Mind mapping is used to visually organize information about stakeholders and their relationship to each other and the organization.*

B Supports comparison between the current engagement levels of stakeholders and the desired engagement levels

> *Incorrect. This answer choice describes a stakeholder engagement assessment matrix. The matrix compares the current and desired stakeholder engagement levels. The diagram presented in the question does not provide stakeholder engagement levels, making this answer choice incorrect.*

C Identifies underlying reasons for the level of support of project stakeholders

Incorrect. Root cause analysis identifies underlying reasons for the level of support of project stakeholders. The diagram presented in the question does not indicate reasons for the level of support of project stakeholders. Therefore, this answer choice can be eliminated.

D Displays results of stakeholder analysis comparing to other organizations or other projects that are considered to be world class

Incorrect. This answer choice describes benchmarking which is an example of a data gathering technique that can be used in the Plan Stakeholder Engagement process. Since benchmarking is a data gathering technique, and the diagram presented in the question is an example of the data representation technique, this choice is not the best answer to the question asked.

Reference:

A Guide to the Project Management Body of Knowledge, (PMBOK® Guide) – Sixth Edition, Project Management Institute Inc., 2017, Page(s) 521; see also https://www.pmi.org/learning/library/brainstorming-pizzazz-mind-mapping-5992

PMP Exam 4

Filtered Mode: Displaying 200 questions

Question 42 of 200
Question ID: 612710
A project manager conducted a walkthrough with the sponsors to obtain approval for the project deliverables. The sponsors were very pleased with the completed scope and after the inspection sent a letter praising the project team for exceeding their expectations of quality.

Which of the following is least likely to be updated as the result of this letter?

A Quality management plan

B Lessons learned register

C Requirements traceability matrix

D Requirements documentation

Question answered incorrectly

Hint:
Project documents are updated with the results of the Validate Scope process to assist with the management of the ongoing project as well as future projects.

Correct Answer: A

Explanation:

The scenario indicates that the project manager has carried out the Validate Scope process. In this process, the project manager reviews verified deliverables from the Control Quality process with the customer or sponsor. The inspection may take the form of a review or walkthrough. Once the deliverables have been signed off as meeting acceptance criteria, several project documents, such as the lessons learned register, the requirements documentation, and the requirements traceability matrix can be updated as an output from this process. The question is asking about a document that is the 'least' likely to be updated. The fact the customer praised high-quality makes the quality management plan the least likely to need updating, making it the best answer to the question asked.

Details for Each Option:

A Quality management plan

Correct. The quality management plan documents how applicable policies will be implemented to achieve the quality objectives of the project. There is nothing in the scenario that indicates that any of the policies or their implementation should be modified as a result of the successful inspection.

B Lessons learned register

Incorrect. The lessons learned register is updated with information on challenges encountered with ideas on how to avoid them in the future. This register is also updated to highlight approaches that worked especially well. The project manager should add the lessons learned about the efforts of managing quality and validating deliverables that led to the sponsors' praise.

C Requirements traceability matrix

Incorrect. The requirements traceability matrix is a grid that connects each requirement to the deliverable that fulfills it. The matrix would be updated with the validation results, making this choice an incorrect answer.

D Requirements documentation

Incorrect. During the inspection, the client or sponsor compares each requirement to the verified deliverables. As an output, the project manager should update the requirements documentation with the validation results, including client signoff, change requests, waivers of requirements and cases where quality exceeds requirements. As a project document that would be updated, the requirements document is an incorrect answer.

Reference:

A Guide to the Project Management Body of Knowledge, (PMBOK® Guide) – Sixth Edition, Project Management Institute Inc., 2017, Page(s) 166-167

PMP Exam 4

Filtered Mode: Displaying 200 questions

Question 43 of 200
Question ID: 612629
You work as a project manager for an organization that has a directive type of project management office (PMO). The PMO requires you to document relevant information in the lessons learned register.

What is the main purpose of preparing this documentation?

A To enable the ongoing improvement of products, services, and processes

B To capture issues and risks and document how they were handled

C To ensure quality policies and procedures are implemented on the project

D To satisfy the requirements of the project management office (PMO)

Question answered incorrectly

Hint:
The lessons learned register is a project document used to record knowledge gained during a project.

Correct Answer: A

Explanation:

Continuous improvement, sometimes called continual improvement, is the ongoing improvement of products, services or processes through incremental and/or breakthrough improvements. The lessons learned register is a project document used to record knowledge gained during a project so that it can be used to improve performance in the current project and entered into the lessons learned repository for use in future projects. The lessons learned register is produced as an output of the Manage Project Knowledge process and then used as an input and updated as an output in many processes throughout the project. The main purpose of capturing information in the lessons learned register is so it can be used throughout the project lifecycle to improve the performance of the current project as well as future projects. In this manner, documenting the knowledge gained during the project in the lessons learned register supports continuous improvement. Therefore, of the available choices, enabling the ongoing improvement of products, services, and processes best describes the purpose of documenting relevant information in the lessons learned

register.

Details for Each Option:

A To enable the ongoing improvement of products, services, and processes

Correct. The lessons learned register is a project document used to record knowledge gained during a project so that it can be used to improve products, services, and processes in the current project and entered into the lessons learned repository for use in future projects.

B To capture issues and risks and document how they were handled

Incorrect. While the lessons learned register might include issues and risks and how they were handled, it is not limited to issues and risks. The lessons learned register is used to document the knowledge gained during the project to improve future performance. Additionally, issues are primarily recorded in the issue log and risks are recorded in the risk register. Another answer choice better addresses the question asked.

C To ensure quality policies and procedures are implemented on the project

Incorrect. Ensuring quality policies and procedures are implemented on the project is part of the activities associated with the Project Quality Management Knowledge Area. Documenting information in the lessons learned register serves another purpose.

D To satisfy the requirements of the project management office (PMO)

Incorrect. Although complying with organizational requirements might motivate a project manager to maintain a lessons learned register, the question is asking for the main purpose of preparing this documentation. The purpose of preparing and maintaining the lessons learned register is to document the knowledge gained during the project in order to improve future performance.

Reference:

A Guide to the Project Management Body of Knowledge, (PMBOK® Guide) – Sixth Edition, Project Management Institute Inc., 2017, Page(s) 48, 104, 113; see also http://asq.org/learn-about-quality/continuous-improvement/overview/overview.html

---

PMP Exam 4

Filtered Mode: Displaying 200 questions

Question 44 of 200
Question ID: 612766
To determine the project needs and structure, the project manager has had several meetings with the project sponsor and some of the key stakeholders. As a result, the project manager has completed the development of a document that describes the project purpose, quantifiable criteria that must be met by the project, and key deliverables.

What should the project manager do next?

A Get approval for the document

B Develop the project management plan

C Develop the project charter

D Identify stakeholders and analyze them

Question answered incorrectly

Hint:
What is required before a project is formally authorized?

Correct Answer: A

Explanation:

The document described in the scenario is the project charter. The project charter documents high-level information on the project and describes the quantifiable criteria that must be met by the project as well as the key deliverables. Chartering a project validates the alignment of the project to the strategy and ongoing work of the organization. An 'approved' project charter formally authorizes the project and allows the project manager to apply organizational resources to project activities. Hence, of the choices provided, getting the approval of the document, namely the project charter, is what the project manager should do next and is, therefore, the best answer to the question asked.

Note, while some of the elements typically included in the project charter are not specified in the scenario (such as the high-level risks, assumptions, constraints, milestone list, etc.), it can be reasonably assumed the document described by the scenario is a project charter.

Details for Each Option:

A Get approval for the document

Correct. The document described in the scenario is the project charter. The project charter documents high-level information on the project, the quantifiable criteria that must be met by the project, and the key deliverables. To authorize the project officially, the project charter should be approved.

B Develop the project management plan

Incorrect. The project management plan is a comprehensive document that defines the project work and how the work will be performed. The project charter is an input to the Develop Project Management Plan process. Since the scenario implies the project charter has not yet been approved, the development of the project management plan cannot begin.

C Develop the project charter

Incorrect. The project charter documents high-level information on the project and describes the quantifiable criteria that must be met by the project. The scenario implies the document the project manager helped develop is the project charter. Since the project charter has already been developed, this answer choice is incorrect.

D Identify stakeholders and analyze them

Incorrect. The document described in the scenario is the project charter. Since the project charter authorizes both the project and the project manager, getting the charter approved should precede any other activity, including the identification of stakeholders and stakeholder analysis.

Reference:

A Guide to the Project Management Body of Knowledge, (PMBOK® Guide) – Sixth Edition, Project Management Institute Inc., 2017, Page(s) 81

PMP Exam 4

Filtered Mode: Displaying 200 questions

Question 45 of 200
Question ID: 613550
A project manager is leading a project to install self-service kiosks. After a bidder conference, one of the prospective vendors asks the project manager if a WiFi connection is required to establish connectivity with the kiosks. The project manager realizes that the WiFi is indeed required but was not discussed at the conference nor was it part of the bid documents.

What is the best course of action for the project manager?

A Thank the vendor for raising this point and let this vendor know that WiFi access should be delivered

B Send a formal letter to all prospective vendors clarifying that WiFi access is part of the bid

C Hold another bidder conference with all prospective vendors to clarify the WiFi requirement

D Ignore the question as no additional clarifications are allowed after the conference has been concluded

Question answered incorrectly

Hint:
What is the best and most efficient way to ensure fairness in the procurement process?

Correct Answer: B

Explanation:

The scenario presents a situation where providing one vendor with critical information may give a competitive advantage to that vendor. The PMI Code of Ethics and Professional Conduct sets a standard of fairness which is applicable in this case. The Code reads, "Fairness is our duty to make decisions and act impartially and objectively. Our conduct must be free from competing self interest, prejudice, and favoritism." It also states, "We provide equal access to information to those who are authorized to have that information." Sending a clarification to all of the vendors ensures that they all have a clear and common understanding of the procurement and that no one has an unfair advantage. This action is consistent with the standard of fairness as described by the PMI Code of Ethics and Professional Conduct and provides the most efficient and effective

method of ensuring the vendors have all of the necessary information to prepare their proposals.

Details for Each Option:

A Thank the vendor for raising this point and let this vendor know that WiFi access should be delivered

Incorrect. The knowledge of a WiFi requirement might give the vendor that asked the question a competitive advantage over the other vendors that attended the bidder conference. This situation would create a conflict with the value of fairness as described by the PMI Code of Ethics and Professional Conduct.

B Send a formal letter to all prospective vendors clarifying that WiFi access is part of the bid

Correct. Sending a clarification to all of the prospective vendors ensures that they have a clear and common understanding of the procurement and that no one has an unfair advantage. This action is consistent with the standard of fairness outlined in the PMI Code of Ethics and Professional Conduct.

C Hold another bidder conference with all prospective vendors to clarify the WiFi requirement

Incorrect. Holding another bidder conference to clarify the WiFi requirement would ensure the fairness of the bid process. However, doing this would not be the best use of time for the project manager and the vendors. There is another answer choice which is aligned with the value of fairness in a more efficient manner.

D Ignore the question as no additional clarifications are allowed after the conference has been concluded

Incorrect. Having the WiFi is a project requirement and, therefore, should be communicated to the vendors. Additionally, the purpose of a bidder conference is to ensure that the vendors have a clear and common understanding of the procurement. If an important aspect of the project was overlooked during the bidder conference, a clarification should be provided to all of the vendors that were in attendance.

Reference:

A Guide to the Project Management Body of Knowledge, (PMBOK® Guide) – Sixth Edition, Project Management Institute Inc., 2017, Page(s) 3; see also The PMI Code of Ethics and Professional Conduct, Fairness

---

PMP Exam 4

Filtered Mode: Displaying 200 questions

Question 46 of 200
Question ID: 613708
You as a project manager have outsourced a portion of your work to a vendor with whom neither you nor the sponsor has worked with before. You have a cost-reimbursable contract with the seller. The sponsor, on more than one occasion, has discussed his concerns with you that the seller could easily increase their profits with this type of agreement.

What should you tell the sponsor to decrease his apprehensions?

A You audit every invoice to ensure the costs are applicable and chargeable to your project.

B You do not expect any changes to the scope.

C The seller has the risk with this type of contract.

D With this type of contract, the seller agrees to a set reimbursement amount, so the final costs to your project are pre-determined.

Question answered incorrectly

Hint:
Part of the Control Procurements process is monitoring payments to the sellers.

Correct Answer: A

Explanation:

The Control Procurements process has a financial management component that involves monitoring payments to the seller. One of the chief concerns is making sure the charges from the seller represent the work that has been completed. By auditing the seller invoices, you can ensure the seller is charging you correctly for the work that has been completed. In this scenario, the audit should help ease the sponsor's concerns of being overcharged by the seller.

Details for Each Option:

A You audit every invoice to ensure the costs are applicable and chargeable to your project.

Correct. A cost-reimbursable contract involves payments (cost reimbursements) to the seller for all costs incurred for completed work. By auditing every invoice, you can ensure that the costs that have been billed are aligned with the work that has been completed and any extra charges will be investigated. This proactive review should put the sponsor at ease regarding the cost-reimbursable contract.

B You do not expect any changes to the scope.

Incorrect. A cost-reimbursable contract involves payments (cost reimbursements) to the seller for all costs incurred for completed work. This type of agreement is used when the scope of the work is expected to change, and costs cannot be estimated accurately enough to use a fixed-price contract, which has less buyer cost risk. If you did not expect changes to the scope, you would likely have negotiated a fixed-price contract. Furthermore, saying that you do not expect 'any' changes to the scope is likely to be unrealistic even with fixed-price contracts.

C The seller has the risk with this type of contract.

Incorrect. A cost-reimbursable contract involves payments (cost reimbursements) to the seller for all costs incurred for completed work. In this type of agreement, you, as the buyer, have the most cost risk because the total costs are unknown.

D With this type of contract, the seller agrees to a set reimbursement amount, so the final costs to your project are pre-determined.

Incorrect. This answer is describing a fixed-price contract where a fixed total price is set for the work while in the scenario described you have a cost-reimbursable contract which involves payments (cost reimbursements) to the seller for all costs incurred for completed work.

Reference:

A Guide to the Project Management Body of Knowledge, (PMBOK® Guide) – Sixth Edition, Project Management Institute Inc., 2017, Page(s) 494, 471-472

PMP Exam 4

Filtered Mode: Displaying 200 questions

Question 47 of 200
Question ID: 612468
A project manager is reviewing a document where information about problems impacting project performance is recorded and monitored. According to the document, a new problem that was logged yesterday by a project team member indicates that delays have just exceeded the established schedule variance threshold and corrective action is required. No additional details about the new problem are provided in the document.

What should the project manager do immediately?

A Assign a responsible party to follow up on the problem

B Record the disposition of the change request

C Send the project progress report to the stakeholders

D Update the lessons learned register

Question answered incorrectly

Hint:
What other information should be recorded in the issue log?

Correct Answer: A

Explanation:

Based on the scenario described, the project is in the Monitor and Control Project Work process. The question implies that the project manager is reviewing the issue log, which is an input to this process. The question indicates a new issue has been recorded. The issue log is a project document where information about issues is captured and monitored. According to the scenario, the information already recorded in the issue log includes the name of the person who raised the issue, the date the issue was captured, and a description of the issue. Other information that should be documented in the issue log includes the name of the person assigned to the issue, priority of the issue, target resolution date, status, and final resolution. The question indicates that corrective action is required, therefore, of the available choices, the next logical step for the project manager is to assign a responsible party to follow up on the issue so it can be addressed and then record that information in the issue log.

Details for Each Option:

A Assign a responsible party to follow up on the problem

Correct. The question implies that the project manager is reviewing the issue log, and a new issue was documented. The next logical step for the project manager is to assign a responsible party to follow up on the issue and record that information in the issue log.

B Record the disposition of the change request

Incorrect. The disposition of all change requests is captured in the change log. The question is describing the issue log as opposed to the change log, and the disposition of change requests is not recorded in the issue log. Additionally, the question does not provide any information suggesting a change request has been submitted.

C Send the project progress report to the stakeholders

Incorrect. Typically, the communications management plan would define how project communications will be planned, structured, implemented, and monitored for effectiveness. There is not enough information in the question to determine if this plan requires to send of the project progress report to stakeholders under the circumstances described in the scenario.

D Update the lessons learned register

Incorrect. Knowledge gained during the project should be captured in the lessons learned register to improve future performance on the project. However, based on the limited information available to the project manager, there are no lessons learned to be documented at this point. Additionally, the project manager should first seek to the resolve the problem at hand before being concerned about updating the lessons learned register.

Reference:

A Guide to the Project Management Body of Knowledge, (PMBOK® Guide) – Sixth Edition, Project Management Institute Inc., 2017, Page(s) 96, 108-109

PMP Exam 4

Filtered Mode: Displaying 200 questions

Question 48 of 200

Question ID: 612140

You are currently carrying out activities to determine whether the quality processes agreed on in the quality management plan are providing the intended results, whether the work that was planned to measure the quality of the product is the right work to meet the customer requirements, and whether the procedures and policies are being followed as planned.

Which process are you currently involved in?

A Control Quality

B Manage Quality

C Plan Quality Management

D Perform Quality Assurance

Question answered incorrectly

Hint:
Which part of the Project Quality Management Knowledge Area is being focused on in the scenario?

Correct Answer: B

Explanation:

The Manage Quality process uses the measurements gathered in the Control Quality process to determine the following;

- Whether the quality processes agreed on in the quality management plan are providing the intended results,
- Whether the work that was planned to measure the quality of the product is the right work to meet the customer requirements and the right quality,
- Whether the procedures and policies are being followed as planned, and

- Can any improvements be made?

The activities you are performing in the scenario described are essentially the broader definition of the Manage Quality process, making the Manage Quality process the best answer to the question asked.

Details for Each Option:

A Control Quality

Incorrect. Control Quality is the process of measuring the quality of the deliverables to determine if they meet the requirements outlined in the quality management plan. The scenario describes a different set of activities which does not fall under the definition of the Control Quality process.

B Manage Quality

Correct. The scenario ultimately specifies some of the main activities associated with the Manage Quality process.

C Plan Quality Management

Incorrect. Plan Quality Management is the process of determining how you will measure and what methods you will use to make sure you are meeting the requirements of the deliverable. Those activities are different from what is being described by the scenario provided.

D Perform Quality Assurance

Incorrect. 'Perform Quality Assurance' is not a process specified in the PMBOK® Guide, Sixth Edition.

Reference:

A Guide to the Project Management Body of Knowledge, (PMBOK® Guide) – Sixth Edition, Project Management Institute Inc., 2017, Page(s) 288-290

PMP Exam 4

Filtered Mode: Displaying 200 questions

Question 49 of 200

Question ID: 612090

A project has short iterative planning and executing cycles where the requirements are progressively elaborated. The key stakeholders are continuously involved and provide frequent feedback allowing the team to respond to changes more quickly.

What is the best way for the project manager to manage quality in this type of project environment?

A By conducting periodic quality audits

B By using the Validate Scope process

C By scheduling regular retrospectives

D By using the quality control matrix

Question answered incorrectly

Hint:
How is quality managed on agile projects?

Correct Answer: C

Explanation:

The project in the scenario is using an agile methodology which focuses on small batches of work and allows the team to uncover inconsistencies and quality issues earlier in the project life cycle. Quality is managed by scheduling regular retrospectives to check on the effectiveness of the quality processes. During a retrospective, root causes of issues are sought, and new approaches are suggested to improve the development process in general and quality in particular. Subsequent retrospectives evaluate any new approaches to determine if they are working and should be continued, need adjusting, or should be dropped from use. Therefore, of the available choices, scheduling regular retrospectives is the best way for the project manager to

manage quality on his project which is being conducted using agile practices.

Details for Each Option:

A By conducting periodic quality audits

Incorrect. A quality audit is a structured independent process to determine if project activities comply with organizational and project policies, processes, and procedures. While it's important to conduct quality audits, the question is asking about the best way to manage quality in the project environment described in the scenario. The scenario describes a project which is managed using agile methodologies where recurring retrospectives, rather than audits, are the best practice to check on the effectiveness of the quality processes.

B By using the Validate Scope process

Incorrect. Validate Scope is the process of formalizing acceptance of the completed project deliverables. The project in the scenario is using agile methodology where requirements, or scope, is defined and redefined throughout the project. Since the scope is defined iteratively, the Validate Scope process, in its traditional or waterfall meaning, is not performed. Additionally, even if the question was about a traditional project, the Manage Quality and Control Quality processes, not the Validate Scope process, are used to manage quality on a project.

C By scheduling regular retrospectives

Correct. Retrospectives are recurring meetings that are intended to regularly check on the effectiveness of the quality processes. Retrospectives are typically used on projects that are conducted using agile methodologies. Since the scenario describes an agile environment, using recurring retrospectives would be the best tool for the project manager to use on his project to manage quality.

D By using the quality control matrix

Incorrect. 'Quality control matrix' is a made-up term.

Reference:

A Guide to the Project Management Body of Knowledge, (PMBOK® Guide) – Sixth Edition, Project Management Institute Inc., 2017, Page(s) 276, 666

PMP Exam 4

Filtered Mode: Displaying 200 questions

Question 50 of 200
Question ID: 651311

In a meeting with all the project managers of a department-wide improvement program, the program manager states the program's mission and authority relationships.

As one of the project managers attending the meeting, what do the mission and authority relationships represent to your project?

A Organizational process assets

B Matrix organization

C Enterprise environmental factors

D Project requirements

Question answered incorrectly

Hint:
These conditions are not under the control of the project manager.

Correct Answer: C

Explanation:

Any condition or factor that stems from outside the project or even outside the project's enterprise is considered an enterprise environmental factor. The program's mission, values, and authority relationships are outside the project's immediate control, yet they factor into how the project operates within the enterprise. Hence these are good examples of enterprise environmental factors.

Details for Each Option:

A Organizational process assets

Incorrect. Organizational process assets are the materials, resources, and references, for example, that an enterprise may supply or mandate on a project. What the program manager here is providing are not assets but conditions in which the program is intended to operate within and controlled.

B Matrix organization

Incorrect. Matrix organizations are organizational constructs of a project. There are no specific organizational structures being discussed in this question, only that there are projects within a program.

C Enterprise environmental factors

Correct. The program's mission statement and authority relationships are outside the immediate control of the project and the project team. Hence these are examples of enterprise environmental factors.

D Project requirements

Incorrect. Although not explicitly stated, some of the program's mission and authority relationships may equate into project requirements. There is no indication that all projects are required to deliver on an authority relationship, for example.

Reference:

A Guide to the Project Management Body of Knowledge, (PMBOK® Guide) – Sixth Edition, Project Management Institute Inc., 2017, Page(s) 557

PMP Exam 4

Filtered Mode: Displaying 200 questions

Question 51 of 200

Question ID: 612458

During a concept car development project, the leather obtained for the interior was of poor grade due to an ordering error. The problem was immediately resolved by substituting the low-grade leather with leather used for the production car line. With the vehicle interior installation complete, the issue with the low-grade leather will no longer pose a problem for the project.

Based on this scenario, what is the most important action for the project manager to take?

A Revise the assumption log

B Record the problem in the risk register

C Inform the project sponsor

D Update the lessons learned register

Question answered incorrectly

Hint:
The problem described by the question is no longer an issue for the current project but may affect future projects.

Correct Answer: D

Explanation:

The lessons learned register is a project document used to record knowledge gained during a project so that it can be used in the current project and entered into the lessons learned repository. The lessons learned register, as it relates to the Control Resources process, can be updated with techniques that were effective in managing resource logistics, scrap, utilization of variances, and corrective actions that were used to respond to resource variances. Although the lessons learned will be of little value for use on the present project at this point (since the issue has been resolved), the knowledge gained will be transferred to the lessons learned repository at the end of the project which will then be available to improve the performance of future projects.

Therefore, of the available options, the most important action for the project manager to take at this point in the project is to update the lessons learned register.

Details for Each Option:

A Revise the assumption log

Incorrect. The assumption log is a document created for the first time as an output from the Develop Project Charter process to capture high-level strategic operational assumptions and constraints that are normally identified in the business case before the project is initiated. The assumption log is then updated as part of the Direct and Manage Project Work process. The issue has been resolved, and there is nothing in the scenario to suggest that the assumption log should be revised.

B Record the problem in the risk register

Incorrect. The question does not indicate if the risk of low-grade leather was identified earlier in the project. Regardless of whether this risk was captured in the risk register or not, with the interior of the concept vehicle finished, the grade of the leather for the interior no longer poses a risk for the project. Therefore, recording a risk that has already occurred is unlikely to be the most important action for the project manager to take in this situation.

C Inform the project sponsor

Incorrect. While informing the project sponsor about the issue and the resolution may be required, of the choices provided, this action is unlikely to be the most important thing for the project manager to do at this point.

D Update the lessons learned register

Correct. The lessons learned register, as it relates to the Control Resources process, can be updated with techniques that were effective in managing resource logistics, scrap, utilization of variances, and corrective actions that were used to respond to resource variances. Since the issue has already been resolved, updating the lessons learned register would be of little value for use on the present project at this point. However, for the future projects, the knowledge gained during this project will be beneficial. Therefore, documenting this knowledge in the lessons learned register (to be transferred at the end of the project to the lessons learned repository) would be the most important action for the project manager to take and is, therefore, the best answer to the question asked.

Reference:

A Guide to the Project Management Body of Knowledge, (PMBOK® Guide) – Sixth Edition, Project Management Institute Inc., 2017, Page(s) 354, 358

PMP Exam 4

Filtered Mode: Displaying 200 questions

Question 52 of 200
Question ID: 612628

A business case with a proposal for a project has been submitted to the company's portfolio steering committee. The committee approves the proposal and requests one of the company's project managers to lead the project.

What should the project manager do next?

A Meet with the sponsor and key stakeholders to learn the key project elements

B Develop the project management plan

C Determine how to plan for each Project Management Knowledge Area

D Create the project scope statement

Question answered incorrectly

Hint:
A project charter is developed by identifying summary project information collected from key stakeholders.

Correct Answer: A

Explanation:

A business case is defined as a documented economic feasibility study used to establish the validity of the benefits of a selected component lacking sufficient definition and that is used as a basis for the authorization of further project management activities. An approved business case serves as an input to the Develop Project Charter process which is the next logical step for the project manager in the scenario described. However, having an approved business case is not enough to complete this process. Key project elements and high-level information should be identified to accomplish this goal. This can be achieved by using tools and techniques applicable to the Develop Project Charter process. Data gathering and expert judgment are among those tools and techniques. Meeting with the sponsor, key stakeholders, and other subject matter

experts to learn the key project elements from their perspective are examples of data gathering and expert judgment. Therefore, of the choices provided, meeting with these groups and individuals is what the project manager should do next.

Details for Each Option:

A Meet with the sponsor and key stakeholders to learn the key project elements

Correct. Since the business case has been approved, the development of the project charter may begin. By meeting with the sponsor and key stakeholders, the project manager will be able to identify the project objectives, success criteria, key deliverables, high-level requirements, and other summary information which will be included in the project charter. Obtaining these key project elements will assist the project manager in the development of the project charter, which is the next logical step in the scenario described.

B Develop the project management plan

Incorrect. Based on the scenario described, the project is in initiation. The Develop Project Management Plan process belongs to the Planning Process Group and can begin only after the project charter has been developed and approved.

C Determine how to plan for each Project Management Knowledge Area

Incorrect. Planning for each Knowledge Area is another way of saying, 'develop the project management plan'. To start the development of the project management plan, the project manager should have an approved project charter first which has not yet been developed.

D Create the project scope statement

Incorrect. The project scope statement is a detailed description of the project scope, major deliverables, assumptions, and constraints. The project scope statement is developed in project planning, whereas according to the scenario described the project is still in the initiation and does not even have an approved project charter.

Reference:

A Guide to the Project Management Body of Knowledge, (PMBOK® Guide) – Sixth Edition, Project Management Institute Inc., 2017, Page(s) 75-77, 79-80, 81, 561; see also https://www.pmi.org/learning/library/concise-project-charter-team-focus-2157

PMP Exam 4

Filtered Mode: Displaying 200 questions

Question 53 of 200
Question ID: 612113

A project manager is looking for options to execute some of the Manage Quality activities such as failure analysis, design of experiments, and quality improvement.

Which of the following is the best approach for the project manager?

A Use the organization's quality assurance department

B Develop a comprehensive communications management plan

C Create the stakeholder engagement assessment matrix

D Involve customer representatives in some of the quality activities

Question answered incorrectly

Hint:
Quality management is often the responsibility of specific team members.

Correct Answer: A

Explanation:

Manage Quality is the process of translating the quality management plan into executable quality activities that incorporate the organization's quality policies into the project. Depending on the organizational structure, policies, and procedures, the project manager and project team may use the organization's quality assurance department, or other organizational functions, to execute some of those activities. Examples of the activities include but are not limited to failure analysis, design of experiments, and quality improvement. Quality assurance departments usually have cross-organizational experience in using quality tools and techniques and are a good resource for the project. Therefore, of the choices provided, using the organization's quality assurance department would be the best approach for the project manager.

Details for Each Option:

A Use the organization's quality assurance department

Correct. Depending on the organizational structure, quality assurance departments may have cross-organizational experience in using quality tools and techniques and are a good resource for the project to execute some of the Manage Quality activities such as failure analysis, design of experiments, and quality improvement.

B Develop a comprehensive communications management plan

Incorrect. The communications management plan describes how project communications will be planned, structured, implemented, and monitored and controlled. In the scenario, the project manager is looking for options to execute some of the Manage Quality activities rather than plan communications.

C Create the stakeholder engagement assessment matrix

Incorrect. The stakeholder engagement assessment matrix shows the comparison between the current engagement level of stakeholders and the desired engagement levels required for successful project delivery. The matrix is not concerned with the activities related to the Manage Quality process.

D Involve customer representatives in some of the quality activities

Incorrect. While having the customer involved in project execution may be a good idea (which is typically a practice used on agile projects by soliciting feedback from the customer about the deliverables), it is the responsibility of the performing organization to deliver a product, service, or result and ensure it meets the quality specifications.

Reference:

A Guide to the Project Management Body of Knowledge, (PMBOK® Guide) – Sixth Edition, Project Management Institute Inc., 2017, Page(s) 290

PMP Exam 4

Filtered Mode: Displaying 200 questions

Question 54 of 200

Question ID: 612132

To test the deliverable, the team is using a testing device, which should be kept in a refrigerator. Recent test results show excellent precision; however, the accuracy varies with each test run. The project manager suspects there is a correlation between the testing results and the amount of time the device has been out of the refrigerator before testing begins.

What is the best course of action for the project manager to confirm or reject her suspicions?

A Use control charts

B Use a scatter diagram

C Update the risk repository

D Update the lessons learned register

Question answered incorrectly

Hint:
A technique used to show a relationship between two variables.

Correct Answer: B

Explanation:

The scenario implies that the Manage Quality process is being performed. Scatter diagrams are an example of a data representation technique that can be used during this process. A scatter diagram is a graph that tracks two variables to determine their relationship. The scatter diagram can help decide if there is a relationship, or correlation, between the testing results and the amount of time the testing device has been out of the refrigerator. For example, the project manager can plot the dependent variable, the results, on the y-axis of a graph and the independent variable, the amount of time the testing device has been out of the refrigerator, on the x-axis. The graph will reveal either a positive correlation, a negative correlation, or no correlation between the two variables. If the scatter diagram shows any relationship between the

testing results and the time the testing device has been out of the refrigerator, the information can be used to improve the process of testing with the device. Therefore, using a scatter diagram is the best answer to the question asked.

Details for Each Option:

A Use control charts

Incorrect. Control charts are used to determine whether or not a process is stable or has predictable performance. In other words, control charts can be used to track repetitive activities to determine whether or not a process is giving results that are accurate and precise. The project team has already established that the results are precise, but not always accurate, likely by using control charts. However, the project manager wants to determine if there is a correlation between two variables, the amount of time the device has been unrefrigerated before testing, and the results obtained during that testing. Control charts do not demonstrate a relationship between two variables.

B Use a scatter diagram

Correct. A scatter diagram is a graph that tracks two variables to determine their relationship. For example, by using a scatter diagram, the project manager can decide if there is a relationship, or correlation, between the testing results and the amount of time the device has been out of the refrigerator.

C Update the risk repository

Incorrect. 'Risk repository' is a made up term. Even if this was a real project artifact, merely updating the 'risk repository' would not help the project manager confirm or reject her suspicions.

D Update the lessons learned register

Incorrect. The lessons learned register is updated with information on challenges encountered during the project and how they could have been avoided. At this point, it is not clear what is causing the inaccuracies. Once the project manager has determined the root cause of the inaccuracies, the lessons learned register should be updated with the information so it can be used to improve future performance.

Reference:

A Guide to the Project Management Body of Knowledge, (PMBOK® Guide) – Sixth Edition,

Project Management Institute Inc., 2017, Page(s) 293

PMP Exam 4

Filtered Mode: Displaying 200 questions

Question 55 of 200

Question ID: 612421

As a project manager, you are planning the kick-off meeting for your current project. A project team member is assisting you with the arrangements for the meeting and asks you to describe the purpose of the meeting.

Which of the following is least likely to be correct in response to the team member's question?

A Communicate the project objectives to the stakeholders

B Identify the key project deliverables and success criteria

C Gain the commitment of the stakeholders for the project

D Explain the roles and responsibilities of key stakeholders

Question answered incorrectly

Hint:
One of the answer choices is associated with a meeting that might be conducted during project initiation.

Correct Answer: B

Explanation:

The purpose of the project kick-off meeting is to communicate the objectives of the project, gain the commitment of the project team for the project, and explain the roles and responsibilities of each stakeholder. Each of these points is captured by the incorrect answer choices. However, the question is asking to select a response that is the 'least' likely to describe the purpose of the project kick-off meeting. The identification of the key project deliverables and success criteria happens during a meeting to develop the project charter rather than a project kick-off meeting, making the identification of the key project deliverables and success criteria the best answer to the question asked.

Details for Each Option:

A Communicate the project objectives to the stakeholders

Incorrect. Communicating the objectives of the project is one of the project kick-off meeting's objectives., making this choice an incorrect answer.

B Identify the key project deliverables and success criteria

Correct. Identification of the key project deliverables and success criteria are among the items on the agenda of meetings dedicated to the development of the project charter. Since the question is asking to select the answer choice which is least likely to be associated with the kick-off meeting, this choice is the best answer.

C Gain the commitment of the stakeholders for the project

Incorrect. Gaining the commitment of the team and the stakeholders for the project is one of the purposes of the project kick-off meeting and is, therefore, an incorrect answer.

D Explain the roles and responsibilities of key stakeholders

Incorrect. An explanation of the roles and responsibilities of each stakeholder should be included in the project kick-off meeting agenda. Therefore, for this negatively worded question, this choice is an incorrect answer.

Reference:

A Guide to the Project Management Body of Knowledge, (PMBOK® Guide) – Sixth Edition, Project Management Institute Inc., 2017, Page(s) 86

PMP Exam 4

Filtered Mode: Displaying 200 questions

Question 56 of 200

Question ID: 610083

During project planning, the project team rigorously defined the project scope. During project execution, a senior engineer calls the project manager and suggests a simpler and more efficient design which could benefit the project.

What should the project manager do next?

A Nothing, no changes are needed since the project scope was rigorously defined

B Discuss the change with the project sponsor

C Evaluate the impact of the proposed change on the project constraints

D Ask that the engineer submit a change request

Question answered incorrectly

Hint:
The engineer is actually requesting a change. She does it in a verbal conversation. What should be done first when a change is requested to make sure it's properly handled by those who should address it?

Correct Answer: D

Explanation:

A change request is a document to record an adjustment to project scope, schedule, cost, etc. Changes may include corrective action, preventive action, or defect repair, among others. The engineer is proposing what she believes to be a valid design change which can be further evaluated by the change control board. Although changes may be initiated verbally, they should be recorded in written form and entered into the change management and/or configuration management system. Thus, of the available choices, asking the engineer to create and submit a change request is what the project manager should do next, and is, therefore, the best answer to

the question asked.

One may argue that evaluating the change should come before submitting the change request. We had an extensive debate on the subject of change requests in general and on this question in particular. The reason being is that the *PMBOK® Guide* does not do a good job in explaining the exact process in detail. We have discussed this process among our team of certified project management professionals and have concluded that the first thing that should be done when a change is requested on a project is the physical creation of the change request, a document if you wish, filling out a form. Otherwise, on what basis would a project manager and the project team spend time evaluating a request that is not even documented?

Details for Each Option:

A Nothing, no changes are needed since the project scope was rigorously defined

Incorrect. Regardless of how much time was spent during project planning and how well the scope was defined, expecting no changes on a project would be naive thinking. Changes are normal as project work is performed.

B Discuss the change with the project sponsor

Incorrect. Although discussing the change with the project sponsor may be required at some point, this action is unlikely to be the next step for the project manager to take.

C Evaluate the impact of the proposed change on the project constraints

Incorrect. While the impact of the proposed change on the project constraints should be evaluated, the change request should be created first to capture the details and rationale of the engineer's proposed change request. Otherwise, on what basis would the project manager and the team spend time evaluating a request that is not even documented?

D Ask that the engineer submit a change request

Correct. A change request is a document to record a change that may affect the competing project constraints. Given that this change was proposed in a phone call, the change request will also provide a means to capture the details required to evaluate the impact of the change to the project.

Reference:

A Guide to the Project Management Body of Knowledge, (PMBOK® Guide) – Sixth Edition,

Project Management Institute Inc., 2017, Page(s) 115

PMP Exam 4

Filtered Mode: Displaying 200 questions

Question 57 of 200

Question ID: 612585

A project manager is working on a plan for how the project team will acquire goods and services from outside of the organization for an infrastructure development project. The project manager is seeking guidance on what type of contracts can be used on the project.

What is the best course of action for the project manager?

A Review the procurement management plan

B Check the lessons learned repository

C Search for the information on the Internet

D Research the organizational process assets

Question answered incorrectly

Hint:
Where might current procurement policies and procedures for the performing organization be found?

Correct Answer: D

Explanation:

The question implies that the project manager is conducting the Plan Procurement Management process and developing the procurement management plan. The procurement management plan is a component of the project or program management plan that describes how a project team will acquire goods and services from outside of the performing organization. Organizational process assets are one of the inputs into the Plan Procurement Management process. The organizational process assets serve as a source of information on formal procurement policies and procedures as well as approved contract types. Therefore, of the available choices, researching the organizational process assets is the best course of action in this scenario.

Details for Each Option:

A Review the procurement management plan

Incorrect. The procurement management plan is a component of the project or program management plan that describes how a project team will acquire goods and services from outside of the performing organization. The question implies that the project manager is developing the procurement management plan. Therefore, the procurement management plan is not yet available to be used as a resource for information.

B Check the lessons learned repository

Incorrect. The lessons learned repository should be reviewed as it may include information from past projects that will be beneficial in the development of the procurement management plan. However, the lessons learned repository will not have the current policies and procedures regarding contract types.

C Search for the information on the Internet

Incorrect. The Internet may have information on the contract types. However, an Internet search is not likely to provide current policies and procedures of the performing organization.

D Research the organizational process assets

Correct. The organizational process assets is a source of information on formal procurement policies and procedures as well as approved contract types.

Reference:

A Guide to the Project Management Body of Knowledge, (PMBOK® Guide) – Sixth Edition, Project Management Institute Inc., 2017, Page(s) 471

PMP Exam 4

Filtered Mode: Displaying 200 questions

Question 58 of 200

Question ID: 612584

You are planning a project, where you need several external contractors to complete the project deliverables. In past projects, internal developers have had disruptive personality conflicts with contractors. Therefore, before making any long-term commitments, you want to ensure that the contractors are a good fit for your corporate culture and work well with the internal team.

What is your best course of action?

A Send potential contractors to team building workshops

B Conduct a trial engagement with several potential contractors for initial deliverables

C Cover the team charter with the contractors before engaging their services

D Organize a meet and greet with potential contractors and the development team

Question answered incorrectly

Hint:
How might the project manager be able to observe how the contractors interact with the internal project team members in a work setting?

Correct Answer: B

Explanation:

The question suggests that you are developing the procurement management plan as part of the Plan Procurement Management process. Trial engagements are one of the trends and emerging practices in procurement management. Conducting a trial engagement will involve several candidate sellers for initial deliverables and work products on a paid basis before making the full commitment to a larger portion of the project scope. This engagement may help accelerate momentum by allowing the buyer to evaluate potential providers, while simultaneously making progress on project work. The incorrect answer choices are all good ideas that should be incorporated into the procurement management plan. However, prospective PMP aspirants

should always select the 'best' answer among the available options. Conducting a trial engagement is the best course of action in this scenario.

Details for Each Option:

A Send potential contractors to team building workshops

Incorrect. While team-building workshops may enhance social relations among team members, it probably would be more effective and useful to send actual teams to team building activities and training as part of the Develop Team process rather than potential contractors. In addition, it may not be economically feasible to send all potential contractors to these workshops.

B Conduct a trial engagement with several potential contractors for initial deliverables

Correct. Conducting a trial engagement will engage several candidate sellers for initial deliverables and work products on a paid basis before making the full commitment to a larger portion of the project scope.

C Cover the team charter with the contractors before engaging their services

Incorrect. Covering the team charter with the contractors may provide some future benefits in avoiding conflict. However, the team charter is most effective when those subjected to its terms have input into its development. Additionally, just covering the team charter with the contractors will not provide any insight into how the contractors will interact with the company's employees.

D Organize a meet and greet with potential contractors and the development team

Incorrect. Holding a meet and greet is a good idea as it will allow potential contractors and internal employees an opportunity to interact in a social setting. However, a meet and greet will not provide an opportunity to evaluate how the employees will get along with the contractors in an actual work environment.

Reference:

A Guide to the Project Management Body of Knowledge, (PMBOK® Guide) – Sixth Edition, Project Management Institute Inc., 2017, Page(s) 464

PMP Exam 4

Filtered Mode: Displaying 200 questions

Question 59 of 200

Question ID: 612547

While developing a project charter, the project manager recommends using seasoned team members from key functional areas to assist them in their efforts. She relays to the project sponsor that input from the seasoned team members would be critical in developing the project charter.

Which of the following best matches the tool or technique that the project manager describes as critical?

A Analytical techniques

B Project management information system

C Expert judgment

D Meetings

Question answered incorrectly

Hint:
What tool or technique can be provided by a group or individual with experience in a particular application area, knowledge area, discipline, industry, etc.?

Correct Answer: C

Explanation:

In this question, the project manager recommends using seasoned or experienced team members to utilize their expertise in their particular areas to assist in the development of the project charter. The implication is that expert judgment from experienced staff in key areas would be beneficial to the process of developing the project charter. Expert judgment is defined as judgment provided based on a group or person's expertise in a particular application area, knowledge area, industry, etc. The group or individual expertise provided can be based on special education, knowledge, skill, training, or experience. Project managers frequently rely on

expert judgment in many project processes to aid in the success of the project. Expert judgment along with meetings, interpersonal and team skills, and data gathering are all tools and techniques used in the Develop Project Charter process.

Details for Each Option:

A Analytical techniques

Incorrect. Analytical techniques are various techniques used in data analysis to evaluate, analyze, or forecast potential outcomes; however, they are not typically used in the Develop Project Charter process.

B Project management information system

Incorrect. A project management information system (PMIS) provides access to information technology software tools, as well as interfaces to other online systems such as corporate knowledge base repositories. Based on the project manager's recommendation of using input from seasoned team members, the project manager is referring to expert judgment rather than a PMIS.

C Expert judgment

Correct. The project manager is referring to expert judgment, which is judgment provided based upon expertise by a group or person in a particular application area, knowledge area, industry, etc. The expertise can be based on special education, knowledge, skill, training or as in this question, experience, represented as 'seasoned' team members.

D Meetings

Incorrect. Meetings are a tool and technique in the Develop Project Charter process. However, the question references to an opinion provided by seasoned team members (experts). Such an input can be provided at a meeting, over a phone conversation, in an email, or using any other communication means. There is not enough information in question to determine if the input has been provided at a meeting. Furthermore, the question focuses on the source of information (seasoned team members) rather than on the environment in which this input has been given. Therefore, meetings are the not the best answer to the question asked.

Reference:

A Guide to the Project Management Body of Knowledge, (PMBOK® Guide) – Sixth Edition,

Project Management Institute Inc., 2017, Page(s) 79

PMP Exam 4

Filtered Mode: Displaying 200 questions

Question 60 of 200

Question ID: 612188

A project manager has just completed the development of the quality management plan and determined quality metrics. During this process, the project manager and team identified numerous quality requirements and standards for the project and its deliverables.

Which of the following would be the most likely outcome of this process?

A Updates to the requirements traceability matrix

B Test and evaluation documents

C Determination of the optimal cost of quality

D Project team assignments

Question answered incorrectly

Hint:
What may be updated as a result of performing the Plan Quality Management process?

Correct Answer: A

Explanation:

In the scenario, the project manager and team identified numerous quality requirements and standards for the project and its deliverables. Identifying quality requirements and/or standards for the project and its deliverables is one of the main goals of the Plan Quality Management process. The quality management plan and quality metrics are among the outputs of this process. According to the scenario, the plan and the metrics have been produced. Other outputs of this process include project document updates, such as the requirements traceability matrix, which is updated with quality requirements that are determined during the Plan Quality Management process implied by the scenario. Therefore, of the available choices, updates to the requirements traceability matrix are the most likely outcome of the process described by the scenario and,

thus, the best answer to the question asked.

Details for Each Option:

A Updates to the requirements traceability matrix

Correct. The question implies that the Plan Quality Management process is being performed. The requirements traceability matrix is updated with quality requirements that are determined during the Plan Quality Management process.

B Test and evaluation documents

Incorrect. Test and evaluation documents are project documents that describe the activities used to determine if the product meets the quality objectives stated in the quality management plan. These documents are an output from the Manage Quality process, while the scenario implies that the Plan Quality Management process is being performed.

C Determination of the optimal cost of quality

Incorrect. The optimal cost of quality (COQ) is one that reflects the appropriate balance for investing in the cost prevention and appraisal to avoid failure costs. The optimal COQ is determined using data analysis tools and techniques during the Plan Quality Management process implied by the scenario, while the question is asking about an output of this process. Since the quality management plan has already been developed, the optimal COQ has already been determined.

D Project team assignments

Incorrect. Project team assignments is a project document that records the team members and their roles and responsibilities for the project. This document is an output of the Acquire Resources process while the scenario suggests the team is about to complete the Plan Quality Management process.

Reference:

A Guide to the Project Management Body of Knowledge, (PMBOK® Guide) – Sixth Edition, Project Management Institute Inc., 2017, Page(s) 287

PMP Exam 4

Filtered Mode: Displaying 200 questions

Question 61 of 200

Question ID: 612418

A project manager and team are assigned to a website development project. This project will be relatively small, so the same team members will perform the planning and execution of the project.

When is the best time to conduct a project kick-off meeting in this scenario?

A Shortly after project initiation has been completed

B Right before project execution begins

C As part of pre-project work

D During project execution

Question answered incorrectly

Hint:
The kick-off meeting should occur earlier with a small project compared to a larger project.

Correct Answer: A

Explanation:

The question describes a relatively small project where the same team members will perform project planning as well as execution. For small projects, there is usually only one team that performs the planning and the execution. In this case, the kick-off meeting occurs shortly after initiation, in the Planning Process Group, because the team is involved in planning. Therefore, of the available choices, conducting the kick-off meeting just after project initiation is the best answer to the question asked.

Details for Each Option:

A Shortly after project initiation has been completed

Correct. For small projects, there is usually only one team that performs the planning and the execution. In this case, the kick-off meeting occurs shortly after initiation, in the Planning Process Group, because the team is involved in planning. Therefore, conducting the kick-off meeting just after project initiation is the best answer choice.

B Right before project execution begins

Incorrect. Since the same team members will be involved in planning as well as execution, it is best to conduct the project kick-off at the start of project planning rather than right before project execution.

C As part of pre-project work

Incorrect. During pre-project work, the business case and the benefits management plan are created. The project is not even authorized until the project charter has been drafted and approved. A kick-off meeting is held to communicate the start of the project, engage stakeholders, and gain commitment. Communicating the start of the project, engaging stakeholders, and gaining commitment to the project that has not been authorized does not make sense.

D During project execution

Incorrect. In this scenario, the same team members will be performing project planning as well as execution. Therefore, it is best to conduct the kick-off meeting at the start of project planning rather than during project execution, making this an incorrect response.

Reference:

A Guide to the Project Management Body of Knowledge, (PMBOK® Guide) – Sixth Edition, Project Management Institute Inc., 2017, Page(s) 86

PMP Exam 4

Filtered Mode: Displaying 200 questions

Question 62 of 200

Question ID: 612461

You and your project team are developing approaches to involve project stakeholders based on their needs, expectations, interests, and potential impact on the project. To help you with this process, you have asked a team member to create a stakeholder engagement assessment matrix. The project team member states that he has never produced a stakeholder engagement assessment matrix and asks you where to find the stakeholder classifications.

How should you respond?

A Conduct interviews with the identified stakeholders to determine their engagement levels

B Perform stakeholder analysis to determine the stakeholder classification levels

C Initial classification information can be obtained from the stakeholder engagement plan

D Check the stakeholder register for the initial classification information

Question answered incorrectly

Hint:
Which project document contains a list of stakeholders along with pertinent information?

Correct Answer: D

Explanation:

The question implies that the Plan Stakeholder Engagement process is underway, and the stakeholder engagement assessment matrix is a data representation technique that may be used during this process. Stakeholder analysis is performed during the Identify Stakeholders process before project planning, and this process identifies stakeholders along with relevant information including the stakeholders' levels of support for the project. This information is then captured in the stakeholder register which is used as one of the inputs into the Plan Stakeholder Engagement process. Therefore, the project manager should advise the team member to check the stakeholder

register for the initial classification information.

Details for Each Option:

A Conduct interviews with the identified stakeholders to determine their engagement levels

Incorrect. Interviews with the identified stakeholders might be an effective method of determining the level of support for the project by stakeholders. However, the initial stakeholder classification is performed during an earlier process, so the information should already exist. Therefore, this action is unnecessary and not the best answer to the question asked.

B Perform stakeholder analysis to determine the stakeholder classification levels

Incorrect. Stakeholder analysis results in a list of stakeholders with relevant information such as the levels of support for the project. Stakeholder analysis is performed during the Identify Stakeholders process, which is completed before project planning. Therefore, conducting stakeholder analysis at this point in the project is redundant, making this not the best answer choice.

C Initial classification information can be obtained from the stakeholder engagement plan

Incorrect. The description provided by the question indicates that the Plan Stakeholder Engagement process is being performed. The stakeholder engagement plan is an output of the Plan Stakeholder Engagement process. Therefore, the stakeholder engagement plan is not yet available to be used as a resource.

D Check the stakeholder register for the initial classification information

Correct. The stakeholder register contains initial classification information on stakeholders including the levels of support for the project by stakeholders. Of the available options, this response represents the best action for the project team member to take.

Reference:

A Guide to the Project Management Body of Knowledge, (PMBOK® Guide) – Sixth Edition, Project Management Institute Inc., 2017, Page(s) 519, 521-522

PMP Exam 4

Filtered Mode: Displaying 200 questions

Question 63 of 200
Question ID: 612671

You are satisfied with the vendor's deliverables and have sent the vendor the formal written notice that the contract has been completed.

Which of the following would not be updated during this process?

A Procurement file

B Risk report

C Seller performance evaluation documentation

D Lessons learned register

Question answered incorrectly

Hint:
Closed procurements are an output of the Control Procurements process.

Correct Answer: B

Explanation:

In this scenario, you have closed the procurements with the vendor; therefore, you are in the Control Procurements process. The question is asking you to evaluate the answers to determine which activity is 'not' performed during Control Procurements. Updating the procurement file, updating the lessons learned register, and completing seller performance evaluation documentation are all activities that can be performed during the Control Procurements process making all three of these answer choices incorrect. The risk report, however, is not updated as part of carrying out the Control Procurements process making the risk report the correct answer.

Details for Each Option:

A Procurement file

Incorrect. The procurement file is a complete set of indexed contract documentation that is prepared for inclusion with the final project files as part of the Control Procurements process.

B Risk report

Correct. In the scenario described, you are in the Control Procurements process where procurements are closed. The correct answer is an activity that is 'not' part of this process. It is the risk 'register' not the risk 'report' that is updated as part of the Control Procurements process; therefore, updating the risk report is the correct answer.

C Seller performance evaluation documentation

Incorrect. Seller performance evaluation documentation is prepared by the buyer and rates how well the seller is currently performing or has performed the project work and is one of the organizational process assets that can be updated as a result of the Control Procurements process.

D Lessons learned register

Incorrect. As part of the project documents updates, the lessons learned register can be updated with techniques that were effective in maintaining the scope, schedule, and cost of the procured items.

Reference:

A Guide to the Project Management Body of Knowledge, (PMBOK® Guide) – Sixth Edition, Project Management Institute Inc., 2017, Page(s) 499-501

PMP Exam 4

Filtered Mode: Displaying 200 questions

Question 64 of 200

Question ID: 610055

One of your contractors is not performing to the agreed-upon standards. You want to terminate the contract and engage another contractor for the same job. You need to determine the specific legal procedure for the early termination of the contract.

What should you do?

A Check the procurement management plan

B Look at the scope statement

C Review the risk register

D Consult the contract

Question answered incorrectly

Hint:
What document establishes a legal relationship that is subject to remedy in the courts?

Correct Answer: D

Explanation:

The contract is the document you would refer to in order to understand the early termination procedure. A contract is a mutually binding agreement that obligates the seller to provide the specified deliverable. It constitutes a legal relationship. The early termination of a contract is a special case of the Control Procurements process that can result from an agreement by both parties, from the default of one party, or for the convenience of the buyer if provided for in the contract. The rights and responsibilities of the parties in the event of an early termination are contained in the termination clause of the contract.

Details for Each Option:

A Check the procurement management plan

Incorrect. The procurement management plan describes the project's approach to procurement, including make or buy decisions. If resources are required from outside the project, it describes what resources to acquire and how and when to acquire them. The procurement management plan does not contain specific information regarding the rights of the seller or the buyer when a contract needs to be terminated.

B Look at the scope statement

Incorrect. The project scope statement describes the project's scope, major deliverables, assumptions, and constraints. It is part of the scope baseline used to determine the overall scope of the project.

C Review the risk register

Incorrect. The risk register provides information on threats and opportunities that may impact project execution.

D Consult the contract

Correct. A properly drafted contract will contain a termination clause that specifies the rights of the seller or buyer when a contract needs to be terminated.

Reference:

A Guide to the Project Management Body of Knowledge, (PMBOK® Guide) – Sixth Edition, Project Management Institute Inc., 2017, Page(s) 489

PMP Exam 4

Filtered Mode: Displaying 200 questions

Question 65 of 200

Question ID: 612591

A project manager is planning a project to build a new apartment complex on the site of a long-abandoned airport that was closed due to illegal dumping of fuel and oil. The project manager will need to provide a regulatory agency with a detailed explanation of how the cleanup will be performed before a permit can be issued.

What would be the most appropriate bid document to send to potential vendors for the environmental cleanup?

A Request for information (RFI)

B Request for advisement (RFA)

C Request for proposal (RFP)

D Request for quotation (RFQ)

Question answered incorrectly

Hint:
Which of the bid documents is the most formal and includes a detailed explanation of how the work will be performed?

Correct Answer: C

Explanation:

The scenario implies the project manager is carrying out the Plan Procurement Management process. Bid documents are among the outputs of this process. Bid documents are used to solicit proposals from the prospective sellers. An RFP is used when there is a problem in the project, and the solution is not easy to determine. This type of bid document is the most formal and has strict procurement rules for content, timeline, and seller responses. Since the project manager needs a highly detailed explanation of how the seller will perform the work, the most appropriate

bid document to use in this situation is an RFP.

Details for Each Option:

A Request for information (RFI)

Incorrect. An RFI is used when more information on the goods and services to be acquired is needed from the sellers. While this document may partially address the needs of the project manager, there is another choice that provides a better answer.

B Request for advisement (RFA)

Incorrect. 'Request for advisement (RFA)' is a fake type of bid document made up for this question.

C Request for proposal (RFP)

Correct. An RFP is used when there is a problem in the project, and the solution is not easy to determine. This is the most formal of the bid document types and has strict procurement rules for content, timeline, and seller responses.

D Request for quotation (RFQ)

Incorrect. An RFQ is commonly used when more information is needed on how vendors would satisfy the requirements and/or how much it will cost. Although some of the information the project manager is looking for can be included in the RFQ, another answer choice more accurately addresses the question asked.

Reference:

A Guide to the Project Management Body of Knowledge, (PMBOK® Guide) – Sixth Edition, Project Management Institute Inc., 2017, Page(s) 477

PMP Exam 4

Filtered Mode: Displaying 200 questions

Question 66 of 200

Question ID: 651433

An important event indicated in the milestone schedule of a project is approaching when the project manager realizes that a key stakeholder that was supposed to lead the event is on vacation.

What did the project manager likely miss?

A Canceling the vacations of all stakeholders prior to the start of the project

B Providing the stakeholder with the approved project charter

C Signing a mutually binding agreement with the stakeholder to lead the event

D Submitting a change request to update the stakeholder register

Question answered incorrectly

Hint:
Where is the milestone schedule documented?

Correct Answer: B

Explanation:

The project charter is the document issued by the project initiator or sponsor that formally authorizes the existence of the project and provides the project manager with the authority to apply organizational resources to project activities. Additionally, the project charter includes high-level information about the project. The milestone schedule, as well as the roles and responsibilities of the key project stakeholders, are part of the information specified in the project charter. All identified project stakeholders should be informed of the approved project charter to ensure a common understanding of the key deliverables, milestones, and their roles and responsibilities. If the project manager provided the stakeholder with the approved project charter, the stakeholder would have seen the milestone schedule as well as her role and responsibility for the event indicated by the schedule and would unlikely have taken the vacation

that coincided with the event.

Details for Each Option:

A Canceling the vacations of all stakeholders prior to the start of the project

Incorrect. This action seems extreme and unrealistic, nor is it clear from the scenario if the project manager even has the authority to cancel the vacations of all stakeholders.

B Providing the stakeholder with the approved project charter

Correct. All identified project stakeholders should be informed of the approved project charter to ensure a common understanding of the key deliverables, milestones, and their roles and responsibilities. If the stakeholder saw the milestone schedule as well as her role and responsibility for the event, it is unlikely that the stakeholder would have taken the vacation that coincided with the event.

C Signing a mutually binding agreement with the stakeholder to lead the event

Incorrect. A mutually binding agreement is a contract. Contracts are typically used on projects to oblige the seller to provide the specified product or service or result and obliges the buyer to pay for it. If the stakeholder were a seller, a contract would have helped ensure the stakeholder is available. However, it is unclear from the scenario if the stakeholder is a seller. The way the question is worded implies the stakeholder is likely part of the performing organization.

D Submitting a change request to update the stakeholder register

Incorrect. Not only a change request is not required to update a project document such as the stakeholder register, but it is also unclear what change exactly should have been done in the stakeholder register to avoid the situation described in the scenario.

Reference:

A Guide to the Project Management Body of Knowledge, (PMBOK® Guide) – Sixth Edition, Project Management Institute Inc., 2017, Page(s) 81, 561

PMP Exam 4

Filtered Mode: Displaying 200 questions

Question 67 of 200

Question ID: 613760

A project team is meeting to discuss and assess project risks that have been identified on their planned construction project. A facilitator has been brought in to lead the discussion and help the group determine which risks to prioritize based on their probability and potential impact. During the discussion, the group identifies additional risks and assigns risk owners to all identified risks.

What technique is being employed in this scenario?

A Risk workshop

B Root cause analysis

C Brainstorming

D Risk identification

Question answered incorrectly

Hint:
What is a technique used in qualitative risk analysis to discuss, analyze, categorize, and prioritize previously identified risks?

Correct Answer: A

Explanation:

This scenario closely describes a risk workshop - a technique used to undertake qualitative risk analysis. The purpose of a risk workshop is to review previously identified project risks, assess risk probability and impact, categorize and prioritize risks, assign risk owners, and identify additional risks. Their use of a facilitator was a hint that the project team is conducting a specialized meeting.

Details for Each Option:

A Risk workshop

Correct. This scenario is an example of a risk workshop - a technique used to undertake qualitative risk analysis. The purpose of a risk workshop is to review previously identified project risks, assess risk probability and impact, categorize and prioritize risks, assign risk owners, and identify additional risks. Facilitators are sometimes used to guide the discussion.

B Root cause analysis

Incorrect. Root cause analysis is a technique used to determine the basic underlying reason that causes a variance, defect, or risk. The question does not indicate that this is part of the group's discussion.

C Brainstorming

Incorrect. Although brainstorming can be part of a risk workshop, this scenario indicates that the project team is doing more than just brainstorming. The project team is conducting a specialized meeting dedicated to reviewing and assessing previously identified risks and assigning risk owners. Therefore, risk workshop is the better answer.

D Risk identification

Incorrect. Although the project team identified additional risks as part of their discussion, this is not the primary purpose of their meeting. The scenario states that the project team is meeting to discuss previously identified risks, which means that the group has already completed the Identify Risks process and is now undertaking qualitative risk analysis.

Reference:

A Guide to the Project Management Body of Knowledge, (PMBOK® Guide) – Sixth Edition, Project Management Institute Inc., 2017, Page(s) 426

PMP Exam 4

Filtered Mode: Displaying 200 questions

Question 68 of 200

Question ID: 612359

As the project manager, you are analyzing the project schedule and discover that the project is behind schedule due to shipment delays and inclement weather. You want to bring current project performance into alignment with the original planned schedule.

What is your best course of action?

A Apply resource leveling

B Adjust the level of effort

C Adjust the leads and lags

D Apply resource smoothing

Question answered incorrectly

Hint:
Think of ways to refine the project schedule.

Correct Answer: C

Explanation:

Lead is the amount of time a successor activity can be advanced with respect to a predecessor activity. Lag is the amount of time a successor activity will be delayed with respect to a predecessor activity. Adjusting leads and lags is a technique that can be applied in the Control Schedule process during schedule network analysis to bring activities that are behind schedule into alignment with the plan. Therefore, of the choices provided, adjusting leads and lags is the best answer to the question asked.

Details for Each Option:

A Apply resource leveling

Incorrect. When you perform resource leveling, you balance the demand for resources with the available supply. Resource leveling typically increases the critical path of the project and, therefore, is not the best course of action to take when the project is already behind schedule.

B Adjust the level of effort

Incorrect. Level of effort is an activity that does not produce definitive end products and is measured by the passage of time, such as meetings or administrative work. Level of effort is not used to adjust the project schedule.

C Adjust the leads and lags

Correct. Adjusting leads and lags is a way to bring project activities that are behind schedule into alignment with the project plan. Adjusting leads and lags is done as part of the Control Schedule process while conducting schedule network analysis.

D Apply resource smoothing

Incorrect. When you perform resource smoothing, you adjust the timing of different activities so that the requirement for resources does not exceed a pre-defined limit. Resource smoothing is a resource optimization technique and not used to adjust the project's scheduled timeframe.

Reference:

A Guide to the Project Management Body of Knowledge, (PMBOK® Guide) – Sixth Edition, Project Management Institute Inc., 2017, Page(s) 192-193, 214, 228

PMP Exam 4

Filtered Mode: Displaying 200 questions

Question 69 of 200
Question ID: 612758
A project manager is planning a project for his company under a project management office (PMO) that can best be described as supportive. The company policy mandates that a change control board (CCB) must be used for all projects. A project team member shares a draft of the change management plan with the project manager, which contains the following elements:

- A definition of the roles and responsibilities of the CCB
- A clear description of the process for managing change on the project
- Information on how seller-created changes will be processed
- A list of the stakeholders that are authorized to request changes to the project

What feedback might the project manager provide to the project team member regarding the draft of the change management plan?

A There is no need to specify the roles and responsibilities of the CCB since it is the company policy to use CCB for all projects.

B Changes can be requested by any stakeholder involved in the project and not be restricted to only authorized stakeholders.

C Vendors are responsible for producing project deliverables and are not supposed to request changes on projects managed by their clients.

D There is no need to include a description of the process for managing changes since the PMO is available to support projects.

Question answered incorrectly

Hint:
Which element described in the question should not be included in any change management plan?

Correct Answer: B

Explanation:

Any stakeholder involved with the project can request a change, and no authorization is required. It would not make sense to include a list of the stakeholders that are authorized to request

changes to the project. The change management plan might assign responsibility to the project manager, or another team member, for submitting change requests to the CCB to ensure the CCB is presented with all of the necessary information to render a decision. However, it is not realistic to restrict stakeholders from making requested changes and would likely be counterproductive. Of the available choices, stating that changes can be requested by any stakeholder and not be restricted to only authorized stakeholders is the most appropriate response to the team member that drafted the change management plan.

Details for Each Option:

A There is no need to specify the roles and responsibilities of the CCB since it is the company policy to use CCB for all projects.

> *Incorrect. Even when a CCB is used for a project, the extent of the authority provided in the change management plan may vary. For example, the change management plan may state that all change requests must be reviewed by the CCB or it could state that only changes affecting the baselines require CCB approval. If a CCB is authorized for a project, the roles and responsibilities still need to be established in the change management plan.*

B Changes can be requested by any stakeholder involved in the project and not be restricted to only authorized stakeholders.

> *Correct. Changes may be requested by any stakeholder involved with the project. It would not make sense to include a list of the stakeholders that are authorized to request changes to the project.*

C Vendors are responsible for producing project deliverables and are not supposed to request changes on projects managed by their clients.

> *Incorrect. Vendors may produce project deliverables, but they may also request changes to the project. The fact the project is managed by their client does not restrict the vendor from requesting a change when and if necessary. The change management plan should contain information on how seller-requested changes will be processed.*

D There is no need to include a description of the process for managing changes since the PMO is available to support projects.

> *Incorrect. A supportive PMO may provide a consultative role to projects by supplying templates, best practices, training, access to information, and lessons learned from other projects. A PMO does not eliminate the need for a change management plan.*

Reference:

A Guide to the Project Management Body of Knowledge, (PMBOK® Guide) – Sixth Edition, Project Management Institute Inc., 2017, Page(s) 115

PMP Exam 4

Filtered Mode: Displaying 200 questions

Question 70 of 200
Question ID: 612189

You are managing a project with four phases and feel the project has completed the work required to move to the next phase.

What should you do next?

A Gather and record any lessons learned in that phase

B Determine the stakeholder roles and responsibilities for the kick-off of the second phase

C Move on to the next project phase

D Gather stakeholders to compare the project and business documents with the project's performance

Question answered incorrectly

Hint:
Phase gates may also be referred to as other terms such as phase review, stage gate, kill point, and phase entrance or phase exit.

Correct Answer: D

Explanation:

A phase gate, also known as a phase review, is held at the end of a phase. During a phase review, the project's performance and progress are compared to project and business documents. These documents may include the project charter, project management plan, project business case, and benefits management plan. At the phase gate, a determination is made whether or not to proceed with the next phase, repeat the current phase (or elements of it), remain in the phase, or end the project.

Details for Each Option:

A Gather and record any lessons learned in that phase

Incorrect. This response describes a goal of a retrospective or lessons learned meeting and is not what a project manager should do next if they feel they have completed the work required of that phase.

B Determine the stakeholder roles and responsibilities for the kick-off of the second phase

Incorrect. This choice describes a kick-off meeting. Kick-off meetings may be conducted at the start of a project or phase. Before conducting a kickoff for the next phase, something else should have been done.

C Move on to the next project phase

Incorrect. A determination that the project has successfully met the exit criteria for the phase must be established before allowing the project to move to the next phase.

D Gather stakeholders to compare the project and business documents with the project's performance

Correct. This answer describes what happens at a phase review or phase gate to determine if exit criteria for that phase have been met. Conducting a phase review is the next thing a project manager should do if they and the team feel all phase requirements have been satisfied.

Reference:

A Guide to the Project Management Body of Knowledge, (PMBOK® Guide) – Sixth Edition, Project Management Institute Inc., 2017, Page(s) 20-21

PMP Exam 4

Filtered Mode: Displaying 200 questions

Question 71 of 200

Question ID: 612532

The sponsor asked the project manager to share the project progress and recommunicate project objectives to the stakeholders. After reviewing the communications management plan and the stakeholder engagement plan, the project manager decides that a presentation at the upcoming project status meeting would be the best way to share the information. The presentation is well received with a lot of positive feedback.

What should the project manager do next?

A Update the project communications log

B Update the organizational process assets

C Update the communications management plan

D Update the stakeholder engagement plan

Question answered incorrectly

Hint:
Which answer choice describes an output from the Manage Communications process?

Correct Answer: B

Explanation:

Organizational process assets (OPAs) are the plans, processes, policies, procedures, and knowledge bases specific to and used by the organization performing the project. Any artifact, practice, or knowledge involved in the project is considered an OPA. The scenario suggests the project is in the Manage Communications process. The communications management plan and the stakeholder engagement plan are among the inputs to this process. The project manager reviewed both plans and determined that a presentation at the upcoming project status meeting would be the best way to share the information with the stakeholders. Updates to the OPAs, including project reports and presentations, is one of the outputs from the Manage

Communications process. The presentation the project manager delivered is considered an OPA. Since the presentation was a success, a lesson could be learned and used during the remainder of the project and on future projects. Therefore, the next thing the project manager should do is update the OPAs with his presentation.

Details for Each Option:

A Update the project communications log

Incorrect. The 'project communications log' is not a term associated with the PMBOK® Guide. While it is possible that this term is used in the industry, updating the project communications log (if one existed) would not be the best course of action for the project manager. Another answer choice better addresses the question asked.

B Update the organizational process assets

Correct. Organizational process assets (OPAs) can be grouped into two categories; processes, policies, and procedures, and organizational knowledge bases. The OPAs that fall into the corporate knowledge bases are updated throughout the project with project information. The presentation that the project manager gave is an example of the type of information that would be added to the knowledge base aspect of the OPAs. Therefore, the next thing the project manager should do is update the OPAs with his presentation.

C Update the communications management plan

Incorrect. The communications management plan describes how project communications will be planned, structured, implemented, and monitored for effectiveness. There is nothing in the scenario to suggest an update to the communications management plan is required. The project manager has already reviewed the plan and found that a presentation at the status meeting was the best way to share the information. Since this approach worked well, updating the communications management plan is not required.

D Update the stakeholder engagement plan

Incorrect. The stakeholder engagement plan identifies the strategies and actions required to promote the productive involvement of stakeholders in decision making and execution. While the presentation may have been identified in the stakeholder engagement plan as an activity, there is nothing in the scenario to suggest the presentation resulted in a required update to the plan. The project manager has already reviewed the plan and found that a presentation at the status meeting was the best way to share the information. This approach worked well proving the stakeholder engagement plan was adequate and did not require an

update.

Reference:

A Guide to the Project Management Body of Knowledge, (PMBOK® Guide) – Sixth Edition, Project Management Institute Inc., 2017, Page(s) 388, 39-40

PMP Exam 4

Filtered Mode: Displaying 200 questions

Question 72 of 200

Question ID: 612354

Your project team is located in a building that undergoes renovation. During project execution, the power goes out. You know that response plans were made in the event of a power outage which includes the use of a generator, fuel, and an uninterruptible power supply, but you cannot recall where all these items are located.

What should you do next?

A Review the risk register

B Read the risk management plan

C Implement the agreed-upon risk response

D Search any storage areas of the building for the supplies

Question answered incorrectly

Hint:
Where should you find the agreed-upon risk responses for each individual risk and the nominated owners for each response plan?

Correct Answer: A

Explanation:

The realized risk described in the scenario should trigger the Implement Risk Responses process. One of the inputs to the Implement Risk Responses process is the risk register. The risk register records the agreed-upon risk responses for each individual risk and the nominated owners for each response plan. After reviewing the information in the risk register, you, as the project manager, should contact the risk response owner to take the appropriate action outlined in the risk register. It is reasonable to assume that if planned properly, the risk response specified in the risk register will have all the necessary details including the location of the supplies needed to provide the additional power during the outage. Therefore, of the available choices, reviewing

the risk register is what you should do next in this scenario.

Details for Each Option:

A Review the risk register

Correct. The risk register records the agreed-upon risk responses for each individual risk and the nominated owners for each response plan. Therefore, reviewing the risk register is what should be done next in this scenario.

B Read the risk management plan

Incorrect. The risk management plan describes how risk management activities will be structured and performed. However, the risk management plan does not have details on individual risk responses.

C Implement the agreed-upon risk response

Incorrect. As the project manager, you should implement (or have the risk owner to implement) the agreed-upon risk response; however, the question states that you cannot recall the details of the response for this risk. Therefore, you should first review the risk register to find out the details for which you are looking.

D Search any storage areas of the building for the supplies

Incorrect. It is not known from the question whether the supplies are located in the building, or offsite, or should be delivered by a third party. In fact, it does not matter. First, you should review the readily available information about this realized risk by examining the risk register.

Reference:

A Guide to the Project Management Body of Knowledge, (PMBOK® Guide) – Sixth Edition, Project Management Institute Inc., 2017, Page(s) 450

PMP Exam 4

Filtered Mode: Displaying 200 questions

Question 73 of 200

Question ID: 613670

After completing the process of developing cost estimates for the project, you provide all of the documentation to the director of finance for review. The following day, the director of finance calls you with questions on your completed work. She is looking for a range of possible estimates along with the confidence level of the final estimate, and she cannot find that information in what you submitted.

What did you likely forget to produce during this process?

A Cost management plan

B Three-point estimating

C Cost estimates

D Basis of estimates

Question answered incorrectly

Hint:
What output of the Estimate Costs process might contain details including a range of possible estimates along with the confidence level of the final estimate?

Correct Answer: D

Explanation:

The question implies that the Estimate Costs process is being carried out. One output of the Estimate Costs process is the basis of estimates. The basis of estimates contains additional details supporting the cost estimate and may include an indication of the range of possible estimates along with the confidence level of the final estimate. In this case, the basis of estimates was most likely forgotten during the Estimate Costs process.

Details for Each Option:

A Cost management plan

Incorrect. The cost management plan describes how costs will be planned, but it does not have details supporting the cost estimates. Additionally, the cost management plan is an input to the Estimate Costs process and not an output.

B Three-point estimating

Incorrect. Three-point estimating is a technique that uses most likely, optimistic, and pessimistic cost estimates to define an approximate range for an activity's cost. However, three-point estimating does not provide a level of confidence associated with the final estimate. Additionally, three-point estimating is a technique that may be used during the Estimate Costs process and not an output.

C Cost estimates

Incorrect. The question insinuates that the Estimate Costs process had been performed, and cost estimates is an output of the process. However, cost estimates will not provide the level of confidence of the final estimate.

D Basis of estimates

Correct. The basis of estimates is the documentation that contains additional details supporting the cost estimate and may include an indication of the range of possible estimates along with the confidence level of the final estimate. Based on the scenario described, basis of estimates is what you likely forgot to produce.

Reference:

A Guide to the Project Management Body of Knowledge, (PMBOK® Guide) – Sixth Edition, Project Management Institute Inc., 2017, Page(s) 247

PMP Exam 4

Filtered Mode: Displaying 200 questions

Question 74 of 200

Question ID: 612630

You just received an email from your client stating that as a result of changing government regulations, the current project is being canceled. You contact your supervisor, who confirms the news and asks you to terminate the project.

What should you do next?

A Release payments to your supplier

B Relieve the project team from their duties

C Identify lessons learned

D Check the termination clause of the contract

Question answered incorrectly

Hint:
Where would you find information on what your company should do when a project is terminated prematurely by your client?

Correct Answer: D

Explanation:

Agreements, or contracts, are an output from the Conduct Procurements process and an input to the Close Project or Phase process which is, according to the scenario described, you are going to perform. A termination clause is one of the major components of an agreement. Therefore, before closing the project, you must first review the contractual rights and obligations with regard to contract termination and fulfill these obligations. In other words, to ensure that activities required by the contract are performed when closing the project, you must understand the termination clause in the contract.

Details for Each Option:

A Release payments to your supplier

Incorrect. While it is reasonable to assume that you should release payments to your supplier when the project is closed, either as planned or terminated prematurely, the first thing you should do when a project is terminated is to check the termination clause of the contract. In the contract, you can determine who is authorized to receive payments, what portion of the work should be completed for the payments to be released, etc.

B Relieve the project team from their duties

Incorrect. Although as part of the Close Project or Phase process you need to relieve the project team from their duties, the first thing you should do when a project is terminated is to check the termination clause of the contract. The project team members may be required to perform some of the project closure activities. Hence, relieving the team from their duties may prevent the project from being closed properly and is, therefore, unlikely what you should do next.

C Identify lessons learned

Incorrect. Identification of lessons learned is done as part of the Close Project or Phase process. However, this activity is not as urgent as checking the termination clause of the contract which will determine the next steps to be taken when a project is terminated.

D Check the termination clause of the contract

Correct. When a project is closed, either as planned or terminated prematurely, the Close Project or Phase process should be performed. However, in this scenario, before closing the project, you must first understand the termination clause in the contract to decide on what should be done next.

Reference:

A Guide to the Project Management Body of Knowledge, (PMBOK® Guide) – Sixth Edition, Project Management Institute Inc., 2017, Page(s) 489, 123, 128

PMP Exam 4

Filtered Mode: Displaying 200 questions

Question 75 of 200

Question ID: 612535

A project is underway for the launch of a new tea. Before launch, the tea will be subjected to internal tests to ensure conformance to specific standards. After the initial tests are conducted, recommendations to improve both the hand-picking technique and the way the tea is delivered for processing are identified. The project manager is preparing a progress report and would like to include information about the recommendations.

Where can the project manager find this information?

A Change log

B Quality report

C Issue log

D Risk report

Question answered incorrectly

Hint:
Which Knowledge Area deals with process improvements?

Correct Answer: B

Explanation:

In the scenario, the project manager is gathering information for a progress report that he wants to share with the stakeholders, implying that the Manage Communications process is underway. One of the inputs to the Manage Communications process is the quality report which is an output of the Manage Quality process. The quality report contains information on quality issues and process improvements. Since the project manager wants to include the recommendations for process improvements in his progress report, he should consult the quality report.

Details for Each Option:

A Change log

Incorrect. The change log is a list of changes submitted to the organization's change control process during the project and their current status. The recommendations mentioned in the scenario are process improvements and not changes, and, therefore, would not be included in the change log.

B Quality report

Correct. Information in the quality report includes quality issues, project and product improvements, and process improvements. In the scenario, improvements to both the tea picking and delivery processes were identified and would be documented in the quality report, making the quality report the best place to find the information.

C Issue log

Incorrect. The issue log contains information about problems, gaps, inconsistencies, or conflicts that occur unexpectedly and require action. The recommendations identified in the scenario are process improvements and not issues.

D Risk report

Incorrect. The risk report presents information on both overall project risk and individual project risk. While the implementation of the recommendations to improve the process may introduce risk, the recommendations themselves are not considered risks and, therefore, would not have been included in the risk report.

Reference:

A Guide to the Project Management Body of Knowledge, (PMBOK® Guide) – Sixth Edition, Project Management Institute Inc., 2017, Page(s) 382, 296

PMP Exam 4

Filtered Mode: Displaying 200 questions

Question 76 of 200

Question ID: 613765

Your project team has evaluated each identified risk and assigned an estimated dollar amount or time impact to it. To determine which risks will require more detailed response plans, you ask them to compare the risks and determine which ones could most impact the project. You want the data in graph form, with the risks displayed in order from greatest to least potential impact on the project.

What would be the best tool for the team to use in this case?

A Ishikawa diagram

B Tornado diagram

C Decision tree diagram

D Bubble chart

Question answered incorrectly

Hint:
Which diagram is named after the funnel shape of its bars and is used to analyze project sensitivity to cost or other factors?

Correct Answer: B

Explanation:

In this scenario, you are looking for a diagram that will depict the relative potential impact of each risk on project outcomes, with the risks ranked from greatest to least potential impact. A tornado diagram is the best tool to accomplish that. The other answer choices are all tools used in risk assessment or sensitivity analysis, but the tornado diagramming technique is perfectly suited for this purpose.

Details for Each Option:

A Ishikawa diagram

Incorrect. An Ishikawa diagram is used to perform root cause analysis. You would use this technique if your goal were to discover the underlying causes of project risks and determine preventive action.

B Tornado diagram

Correct. As the project manager, you are requesting a diagram that depicts the relative potential impact of each risk on project outcomes, with the risks ranked from greatest to least potential impact. A tornado diagram is the best tool to accomplish that.

C Decision tree diagram

Incorrect. Decision trees can be useful in determining the best of several alternative courses of action by comparing their associated costs and related project risks (in other words, quantifying the potential outcomes of risk scenarios). A tornado diagram, however, is more suited for this purpose (analyzing project sensitivity to risk) and is, therefore, the best answer choice.

D Bubble chart

Incorrect. A bubble chart is a technique of the Perform Qualitative Risk Analysis process used to display risks that have been categorized using more than two parameters.

Reference:

A Guide to the Project Management Body of Knowledge, (PMBOK® Guide) – Sixth Edition, Project Management Institute Inc., 2017, Page(s) 434-435, 425-426, 415

PMP Exam 4

Filtered Mode: Displaying 200 questions

Question 77 of 200

Question ID: 613725

The project is behind schedule. A team member thinks activity A needs more resources, while another wants the resources added to activity B. A third team member suggests a compromise by adding resources to both activities and recovering a week from each. The project manager ends the discussion and makes the unilateral decision to run activities D and E in parallel instead of sequentially.

Which conflict management technique is the project manager using to resolve the issue?

A Force or direct

B Compromise

C Crashing

D Fast tracking

Question answered incorrectly

Hint:
Which conflict management technique is usually enforced through a power position to resolve a conflict?

Correct Answer: A

Explanation:

The *PMBOK® Guide* describes five techniques for conflict management. These techniques include withdraw/avoid, smooth/accommodate, compromise/reconcile, force/direct, and collaboration/problem solve. In this scenario, the project manager used a position of power to enforce a decision in order to resolve the conflict. Pushing one's viewpoint at the expense of others is known as a force/direct approach. Note, force/direct conflict resolution technique is typically used to resolve an emergency. There is not enough information in the question to determine if the two weeks delay is considered an emergency. However, among the choices

given, force/direct is the best answer to the question asked as it accurately describes the action taken by the project manager.

Details for Each Option:

A Force or direct

Correct. Force/direct is a conflict management technique defined by pushing one's viewpoint at the expense of others. It is usually enforced through a position of power to resolve a conflict.

B Compromise

Incorrect. In this scenario, a compromise was suggested, but the project manager made the decision from a position of power.

C Crashing

Incorrect. Crashing is a schedule compression technique which adds resources to an activity on the critical path. However, this is not a conflict management technique.

D Fast tracking

Incorrect. Fast tracking is a schedule compression technique where an activity is run in parallel instead of sequentially. However, this is not a conflict management technique.

Reference:

A Guide to the Project Management Body of Knowledge, (PMBOK® Guide) – Sixth Edition, Project Management Institute Inc., 2017, Page(s) 348-349

PMP Exam 4

Filtered Mode: Displaying 200 questions

Question 78 of 200

Question ID: 612415

You are leading a large and complex project. Due to the size and complexity of the project, you have decided that a project management team will perform most of the planning, and the remainder of the project team will be brought on when the initial planning is complete.

In this scenario, when is the best time to conduct the project kick-off meeting?

A During project execution

B Shortly after project initiation

C As part of pre-project work

D During initial project planning

Question answered incorrectly

Hint:
The kick-off meeting is held later in the project for large projects compared to smaller projects.

Correct Answer: A

Explanation:

The question describes a large and complex project. In large projects, a project management team normally does the majority of the planning, and the remainder of the project team is brought on when the initial planning is complete, at the start of the development/implementation. In this instance, the kick-off meeting takes place with processes in the Execution Process Group. Therefore, of the choices provided, conducting the kick-off meeting during project execution is the best answer to the question asked.

Details for Each Option:

A During project execution

Correct. A project management team typically does the majority of the planning for a large project, and the remainder of the project team is brought on at the start of project execution. Therefore, the kick-off meeting for a large project should take place with processes in the Execution Process Group, making this the correct answer choice.

B Shortly after project initiation

Incorrect. For small projects, the kick-off occurs shortly after initiation because the same team usually performs planning and execution. However, the question describes the project as being large and complex, making this an incorrect response.

C As part of pre-project work

Incorrect. Pre-project work consists of creating the business case and benefits management plan before project initiation. The project is not authorized until the project charter has been approved. The kick-off meeting is held to communicate the start of the project, engage stakeholders, and gain commitment. Communicating the start of the project, engaging stakeholders, and gaining commitment to the project that has not been authorized does not make sense.

D During initial project planning

Incorrect. The scenario states that only the project management team will be involved in the initial planning due to the size and complexity of the project. After initial planning is complete, the remainder of the project team is typically brought on to complete the rest of planning and start project execution. It is easier to gain commitment to the project from individuals who were part of its planning. Since one of the project kick-off meeting's goals is to gain commitment, initial project planning is not the best time for the project kick-off meeting to be conducted without having the remainder of the project team onboard.

Reference:

A Guide to the Project Management Body of Knowledge, (PMBOK® Guide) – Sixth Edition, Project Management Institute Inc., 2017, Page(s) 86

PMP Exam 4

Filtered Mode: Displaying 200 questions

Question 79 of 200

Question ID: 613790

The vendor selection process is underway for a natural gas pipeline project. The project manager has received numerous proposals in response to a request for proposal (RFP). He wants to ensure that the submitted proposals are complete and meet the requirements as specified in the procurement documentation provided to the prospective vendors.

What tool or technique should the project manager use in this situation?

A Data analysis

B Performance reviews

C Audits

D Inspection

Question answered incorrectly

Hint:
Of the available choices, which is the only tool or technique that is typically used during the Conduct Procurements process to evaluate the vendors' proposals?

Correct Answer: A

Explanation:

The question implies that the Conduct Procurements process is being performed. To evaluate the proposals of the prospective vendors during that process, a data analysis technique can be used. Proposals are evaluated to ensure they are complete and respond in full to the bid documents, procurement statement of work, source selection criteria, and any other documents that went out in the bid package. Additionally, of the available choices, only data analysis is a tool or technique used in the Conduct Procurements process.

Details for Each Option:

A Data analysis

Correct. A data analysis technique that can be used during the Conduct Procurements process includes proposal evaluation. Proposals are evaluated to ensure they are complete and respond in full to the bid documents, procurement statement of work, source selection criteria, and any other documents that went out in the bid package.

B Performance reviews

Incorrect. Performance reviews analyze the performance of a vendor against the contract, as opposed to analyzing the proposal submitted by the vendor.

C Audits

Incorrect. Audits are a structured review of the procurement process. Since audits are used to evaluate the procurement process rather than vendors' proposals, this choice can be eliminated as a correct answer.

D Inspection

Incorrect. Inspection is a structured review of the work being performed by the vendor, rather than an evaluation of the proposal submitted by the vendor.

Reference:

A Guide to the Project Management Body of Knowledge, (PMBOK® Guide) – Sixth Edition, Project Management Institute Inc., 2017, Page(s) 487

PMP Exam 4

Filtered Mode: Displaying 200 questions

Question 80 of 200

Question ID: 612464

A project manager is leading a project to produce a new model of an x-ray machine. The quality assurance lead provides checklists that the team needs to use and follow at all times. Also, rigorous reviews are required at the end of each stage of the manufacturing process.

What tool or technique should the project manager use to determine if project activities comply with organizational and project policies, processes, and procedures?

A Process analysis

B Quality audits

C Design for X (DfX)

D Quality reports

Question answered incorrectly

Hint:
Which of the available options is a compliance tool?

Correct Answer: B

Explanation:

The question implies that the Manage Quality process is being conducted. A quality audit is a tool used during the Manage Quality process to provide a structured, independent process to determine if project activities comply with organizational and project policies, processes, and procedures. Therefore, of the choices provided, the best tool or technique for the project manager to use to ensure compliance is quality audits.

Details for Each Option:

A Process analysis

Incorrect. Process analysis is an example of a data analysis tool and technique that can be used in the Manage Quality process to identify opportunities for process improvements. The question is asking about process compliance rather than process improvement.

B Quality audits

Correct. A quality audit is a structured, independent process to determine if project activities comply with organizational and project policies, processes, and procedures.

C Design for X (DfX)

Incorrect. Design for X (DfX) is a set of technical guidelines that can be used as a tool or technique in the Manage Quality process. The DfX may be applied during the design of a product for the optimization of a specific aspect of the design. The question is related to compliance with established policies, processes, and procedures, and not optimization of a design aspect.

D Quality reports

Incorrect. A quality report is a project document and not a tool or technique. Therefore, this answer choice can be eliminated as a correct response.

Reference:

A Guide to the Project Management Body of Knowledge, (PMBOK® Guide) – Sixth Edition, Project Management Institute Inc., 2017, Page(s) 294

PMP Exam 4

Filtered Mode: Displaying 200 questions

Question 81 of 200

Question ID: 613712

During a status update meeting, you provide stakeholders with a chart that tracks the work that remains to be completed against the time left in this period of the project. You point out that the actual rate at which the work is being completed is close to the ideal rate at which the work is planned to be completed.

What type of chart did you show the stakeholders?

A Burndown chart

B Milestone chart

C Gantt chart

D Project schedule network diagram

Question answered incorrectly

Hint:
This chart is common in agile methodologies.

Correct Answer: A

Explanation:

A burndown chart graphically depicts the work that remains to be completed versus the days in the iteration. It is typically used on agile projects and aimed to analyze the variance with respect to an ideal burndown based on the work committed from iteration planning. A diagonal line representing the ideal remaining work each day, or the ideal burndown, and a second diagonal line representing the actual remaining work each day are plotted on the chart. The burndown chart gives a visualization of how the ideal rate of work is comparing with the actual rate of work. Therefore, among the available choices, a burndown chart is the best response.

Details for Each Option:

A Burndown chart

Correct. A burndown chart is typically used in agile project management to track the work that remains to be completed versus the time left in the iteration. A diagonal line representing the ideal rate at which the work is being completed, or the burndown, is plotted with another line representing the daily actual remaining work. The resulting burndown chart visually depicts the variance between the ideal rate of work and the actual rate of work.

B Milestone chart

Incorrect. A milestone chart is a project schedule that shows the anticipated completion dates of major project deliverables. A milestone has no duration, and therefore has no rate of completion; thus, it cannot be the chart shared with the stakeholders.

C Gantt chart

Incorrect. A Gantt chart is a bar chart of the project schedule that shows activities listed on the vertical axis and dates on the horizontal axis. The activity durations are shown as horizontal bars placed according to start and finish dates. The Gantt chart is a graphical depiction of the project schedule; it does not show a rate of completion.

D Project schedule network diagram

Incorrect. A project schedule network diagram shows the activities and the relationship between activities for the project and not a rate of completion.

Reference:

A Guide to the Project Management Body of Knowledge, (PMBOK® Guide) – Sixth Edition, Project Management Institute Inc., 2017, Page(s) 226, 217-218

PMP Exam 4

Filtered Mode: Displaying 200 questions

Question 82 of 200

Question ID: 612481

A project to develop a new online game is in execution. One key stakeholder is adamant that a feature, currently not included in the scope baseline, is added to allow the game to be played on smartphones. Another key stakeholder is just as convinced that a smartphone is too small to provide adequate gameplay experience, and, if the feature is added, she says she will no longer support the project.

What is the best course of action for the project manager?

A Reject the feature since it represents scope creep

B Meet with both stakeholders to negotiate a resolution

C Instruct the project team to implement the feature

D Reject the feature since the project is in execution

Question answered incorrectly

Hint:
Which tools and techniques associated with the Manage Stakeholder Engagement process might be helpful in this scenario?

Correct Answer: B

Explanation:

The question suggests that the Manage Stakeholder Engagement process is about to be carried out. Meetings and negotiation are two of the tools and techniques associated with this process. It is not known from the question whether or not the added functionality will provide sufficient benefit warranting a change request to be submitted to update the project management plan, including the baselines. Regardless of whether or not a change request is ultimately submitted, the project manager must address the conflict between the two key stakeholders. Additionally, more information regarding the proposed changes and the objections should be gathered before

submitting the change request, thus supporting the need for the meeting between the project manager and the stakeholders. Therefore, of the available choices, the next logical step is to meet with the stakeholders to better understand their positions and negotiate a resolution to mitigate any negative effects on stakeholder engagement.

Details for Each Option:

A Reject the feature since it represents scope creep

Incorrect. Scope creep is considered the uncontrolled expansion of product or project scope without adjustments to time, cost, and resources. The added functionality can be included with an approved change request to update the project management plan and included baselines.

B Meet with both stakeholders to negotiate a resolution

Correct. The best course of action is to meet with the stakeholders to better understand their positions and negotiate a resolution to mitigate any negative effects on stakeholder engagement. The meeting would allow gathering more information regarding the proposed changes and the objections before taking further action.

C Instruct the project team to implement the feature

Incorrect. According to the scenario, the project is in execution. A scope cannot be added at will without applying proper change management procedures. A change request is required to add scope to a project which is in execution.

D Reject the feature since the project is in execution

Incorrect. Changes can be made at any point in the project life cycle using the organization's change control process via a change request. Rejecting the feature just because the project is in execution goes against project management best practices and guidelines.

Reference:

A Guide to the Project Management Body of Knowledge, (PMBOK® Guide) – Sixth Edition, Project Management Institute Inc., 2017, Page(s) 525, 527-528

PMP Exam 4

Filtered Mode: Displaying 200 questions

Question 83 of 200
Question ID: 612338

A project manager has just presented the project management plan at a meeting to the project sponsor and other stakeholders who have signed off on the plan.

What should the project manager do next?

A Develop the project schedule

B Have the project sponsor approve the project charter

C Acquire the necessary resources for the project

D Request approval from the project sponsor to proceed with project execution

Question answered incorrectly

Hint:
Reviewing the planning domain of the Project Management Professional (PMP)® Examination Content Outline may be helpful in correctly answering this question.

Correct Answer: C

Explanation:

The Project Management Professional (PMP)® Examination Content Outline contains a list of tasks for each domain, with which PMP aspirants are expected to be familiar. Task #11 of the planning domain states, "Present the project management plan to the relevant stakeholders according to applicable policies and procedures in order to obtain approval to proceed with project execution." Of the available choices, only acquiring project resources is part of project execution, making this the correct answer.

Details for Each Option:

A Develop the project schedule

Incorrect. The project schedule is developed during project planning. Once the project management plan has been reviewed and approved, project planning is complete, and project execution can begin. Based on the scenario described, the project schedule has already been developed as part of the project management plan and is, therefore, not what the project manager should do next.

B Have the project sponsor approve the project charter

Incorrect. The project charter is drafted and approved during the Develop Project Charter process, which is part of project initiation. The scenario states that the project management plan has been completed and approved. The project charter serves as an input into the development of the project management plan; therefore, the project charter was approved before the creation of the project management plan.

C Acquire the necessary resources for the project

Correct. The Acquire Resources process is part of project execution. Once the project management plan has been reviewed and approved, project execution begins. Of the available choices, only acquiring project resources is part of project execution, making this choice the correct answer.

D Request approval from the project sponsor to proceed with project execution

Incorrect. There is not enough information in the question to determine if approval from the project sponsor is required to proceed with project execution. Therefore, since the project management plan has been approved, project execution can begin without any further approvals.

Reference:

A Guide to the Project Management Body of Knowledge, (PMBOK® Guide) – Sixth Edition, Project Management Institute Inc., 2017, Page(s) 25; see also Project Management Professional (PMP)® Examination Content Outline, Project Management Institute Inc., June 2015, Domain 2, Task 11

PMP Exam 4

Filtered Mode: Displaying 200 questions

Question 84 of 200

Question ID: 612177

You are leading a project to build a bridge that will span a deep gorge. You require the use of safety harnesses which are tethered to the structure during construction. However, you are concerned that these efforts may not be enough to ensure the safety of the crew. Therefore, you take action by having a net secured under the bridge as an additional safety measure.

What best describes the action you have taken in this scenario?

A A preventive action to protect the workers

B A corrective action to ensure safety

C A defect repair to fix the safety systems

D A reactive measure to prevent a tragedy

Question answered incorrectly

Hint:
The correct answer is an intentional activity that ensures the future performance of the project work is aligned with the project management plan.

Correct Answer: A

Explanation:

Preventive action is an intentional activity that ensures the future performance of the project work is aligned with the project management plan. Preventive action is distinguished from a corrective action in that a problem is identified ‘before’ it occurs and steps are taken proactively to avoid the problem from occurring. In this scenario, the safety issue is proactively addressed before an accident occurs. Therefore, the action taken in this scenario is best described as a preventive action.

Details for Each Option:

A A preventive action to protect the workers

Correct. Preventive action is an intentional activity that ensures the future performance of the project work is aligned with the project management plan. In this scenario, the safety issue is proactively addressed before an accident occurs. Therefore, the action taken is best described as a preventive action.

B A corrective action to ensure safety

Incorrect. Corrective action is an intentional activity that realigns the performance of the project work with the project management plan. A corrective action is a reactive measure that is taken after the fact (after a problem occurs) rather than proactive. In this case, an action is proactively taken to avoid a safety issue even though a failure of the safety equipment has not yet occurred.

C A defect repair to fix the safety systems

Incorrect. Defect repair is an intentional activity that modifies a nonconforming product or product component. Repairing or replacing a defective safety harness would be considered a defect repair, but that is not the action described by the question. The action taken in the scenario describes an activity to prevent a problem from occurring in the future.

D A reactive measure to prevent a tragedy

Incorrect. In this scenario, a proactive measure is being taken to ensure the safety of those working on the bridge. A reactive measure suggests a failure of the safety equipment occurred and actions were taken to avoid the failure in the future. However, the actions described in the question are proactive and not reactive measures.

Reference:

A Guide to the Project Management Body of Knowledge, (PMBOK® Guide) – Sixth Edition, Project Management Institute Inc., 2017, Page(s) 96

PMP Exam 4

Filtered Mode: Displaying 200 questions

Question 85 of 200

Question ID: 610048

Approximately halfway through your project, a team member accidentally deleted computer files representing hundreds of hours of work. You want to ensure this situation does not recur on the project.

Where should you capture the knowledge gained by recording the impact, recommendations, and proposed actions associated with this situation?

A Lessons learned register

B Lessons learned repository

C Lessons learned log

D Risk register

Question answered incorrectly

Hint:
What output of the Manage Project Knowledge process contains details of the knowledge gained during the project?

Correct Answer: A

Explanation:

The question suggests that the Manage Project Knowledge process is being performed. One output of the Manage Project Knowledge process is the lessons learned register. The lessons learned register is a project document used to record knowledge gained during a project so that it can be utilized in the current project. At the end of the project or phase, the information is transferred to an organizational process asset called the lessons learned repository. The knowledge gained during the project should be captured in the lessons learned register.

Details for Each Option:

A Lessons learned register

Correct. The lessons learned register is a project document used to record knowledge gained during a project for use in the current project.

B Lessons learned repository

Incorrect. Knowledge gained during the project is recorded in the lessons learned register and transferred to the lessons learned repository at the end of the project or phase. The question indicates that the project is only halfway complete.

C Lessons learned log

Incorrect. 'Lessons learned log' is a fake term made up for this question.

D Risk register

Incorrect. The risk register is a repository that contains details of identified project risks rather than lessons learned during the project.

Reference:

A Guide to the Project Management Body of Knowledge, (PMBOK® Guide) – Sixth Edition, Project Management Institute Inc., 2017, Page(s) 104

PMP Exam 4

Filtered Mode: Displaying 200 questions

Question 86 of 200

Question ID: 612158

A project manager is leading the development of a new car model. During testing, it is discovered that the power seats failed before 1,000 cycles, which is an unacceptable failure rate. The problem is traced to an interference issue with the wiring harness and the seat rail. The wiring diagram is updated to reroute the wiring harness to avoid the interference issue for the production cars and prevent it from occurring in the future.

What best describes the measure taken to solve the problem in this scenario?

A A preventive action was performed

B A corrective action was taken

C The defect was repaired

D A component was replaced

Question answered incorrectly

Hint:
The correct answer is an intentional activity that realigns the performance of the project work with the project management plan.

Correct Answer: B

Explanation:

Corrective action is an intentional activity that realigns the performance of the project work with the project management plan. In this scenario, the problem of interference between the power seat wiring harness and seat rail was identified after a failure occurred and steps were taken to prevent the problem from happening in the future. The action of updating the wiring harness diagram to prevent the failure from occurring in the future is best described as a corrective action.

It is important for PMP aspirants to understand the difference between corrective action and preventive action. The fundamental difference between a corrective and preventive action is in how the problem is identified. If the problem is proactively identified 'before' the problem even occurs, then the action taken to avoid the problem from occurring in the future is a preventive action. However, if the problem is discovered after the fact, like the example of the power seat failure, then the action taken to avoid the issue from recurring in the future is considered a corrective action.

Details for Each Option:

A A preventive action was performed

Incorrect. Preventive action is an intentional activity that ensures the future performance of the project work with the project management plan. Preventive action is distinguished from a corrective action in that a problem is identified before it occurs and steps are taken proactively to avoid the problem from occurring. In this scenario, the problem was not identified until it was uncovered during product testing, making it a reactive rather than a proactive measure.

B A corrective action was taken

Correct. Corrective action is an intentional activity that realigns the performance of the project work with the project management plan. In this case, a problem was identified after a failure occurred and steps are taken to prevent the problem from happening in the future. Therefore, the action of updating the wiring harness diagram is best described as a corrective action.

C The defect was repaired

Incorrect. Defect repair is an intentional activity that modifies a nonconforming product or product component. Repairing and rerouting the broken wiring harness would be considered a defect repair, but that is not the action described by the question. The action taken in the scenario describes the update of a wiring diagram to prevent a problem from occurring in the future which can be best described as a corrective action rather than defect repair.

D A component was replaced

Incorrect. Replacing a component is a type of defect repair, where a defect is identified, and the deliverable is modified by replacing a component to repair the defect. The scenario describes an action being taken to avoid a problem on the production of vehicles in the

future rather than replacing a defective component.

Reference:

A Guide to the Project Management Body of Knowledge, (PMBOK® Guide) – Sixth Edition, Project Management Institute Inc., 2017, Page(s) 96

PMP Exam 4

Filtered Mode: Displaying 200 questions

Question 87 of 200

Question ID: 612606

A team member is comparing one of the project deliverables, a web user interface, to the scope baseline to determine if there is any variance in the actual results. The team member encounters a function named ‘customer detail print’ and wants to understand where this requirement came from.

What should the team member review to understand the origin of this requirement?

A Scope management plan

B Scope baseline

C Configuration management plan

D Requirements traceability matrix

Question answered incorrectly

Hint:
How are product requirements linked from their origin to the deliverables that satisfy them?

Correct Answer: D

Explanation:

Based on the scenario described, the project is in the Control Scope process, and the requirements traceability matrix is an input to this process. The requirements traceability matrix is a grid that links product requirements from their origin to the deliverables that satisfy them. Therefore, reviewing the requirements traceability matrix would allow the team member to understand where the ‘customer detail print’ function came from, making the requirements traceability matrix the best answer to the question asked.

Details for Each Option:

A Scope management plan

Incorrect. The scope management plan is a component of the project management plan that describes how the scope will be defined, developed, monitored, controlled, and validated. The scope management plan does not indicate what is in or out of scope, but rather documents how the scope is managed.

B Scope baseline

Incorrect. The scope baseline is the approved version of a scope statement, work breakdown structure (WBS), and its associated WBS dictionary. Although the scope baseline should encompass the entire scope of the project, it does not connect the detailed features and functions back to the requirements as requested by the scenario.

C Configuration management plan

Incorrect. The configuration management plan is a component of the project management plan that describes how to identify and account for project artifacts under configuration control. The configuration management plan does not provide insight into project requirements.

D Requirements traceability matrix

Correct. The requirements traceability matrix is a grid that links product requirements from their origin to the deliverables that satisfy them.

Reference:

A Guide to the Project Management Body of Knowledge, (PMBOK® Guide) – Sixth Edition, Project Management Institute Inc., 2017, Page(s) 169

PMP Exam 4

Filtered Mode: Displaying 200 questions

Question 88 of 200

Question ID: 612970

You and appropriate stakeholders have conducted the project benefit analysis and developed the business case for a project to build a new robotic production line. The business case indicates that the total cost of the project will be $150,000 including installation and setup, and the cost savings are expected to be $40,000 annually.

What can be said about this project?

A The $150,000 investment is considered a sunk cost at this point in the project

B The opportunity cost is too high to continue with this project

C The robot will pay for itself within three years

D The payback period is 45 months

Question answered incorrectly

Hint:
How long will it take to recover the initial investment?

Correct Answer: D

Explanation:

Payback period is the time it takes for the organization to earn back the initial investment (in terms of monetary cost) to the project and begin making profits. In this case, the $150,000 investment divided by the cost savings of $40,000 annually is 3.75 years or 45 months. Therefore, the payback period is 45 months, and the only correct answer among the available choices.

While the topic of this question is just briefly mentioned in the *PMBOK® Guide*, the Project Management Professional (PMP)® Examination Content Outline, June 2015, covers knowledge and skills with which PMP aspirants are expected to be familiar. Project finance principles are

among these knowledge and skills.

Details for Each Option:

A The $150,000 investment is considered a sunk cost at this point in the project

Incorrect. Sunk costs are the costs that have already been incurred which cannot be recovered. The question states that the total cost of the robot's acquisition 'will be' $150,000. Therefore, the investment in the robot's acquisition has yet to be incurred and is not considered a sunk cost.

B The opportunity cost is too high to continue with this project

Incorrect. Opportunity cost is the value of the best alternative given up when a choice is made. It is not known from the description provided by the question which alternative investment options were considered when this project was selected. Therefore, there is no way to determine if there was a more attractive investment opportunity.

C The robot will pay for itself within three years

Incorrect. With a cost savings of $40,000 annually, the company will only have recouped $120,000 of the original $150,000 investment after three years.

D The payback period is 45 months

Correct. The question states that an investment of $150,000 will be required and will have a cost savings of $40,000 annually. To calculate the payback period the $150,000 investment is divided by the cost savings of $40,000 annually which is 3.75 years or 45 months.

Reference:

A Guide to the Project Management Body of Knowledge, (PMBOK® Guide) – Sixth Edition, Project Management Institute Inc., 2017, Page(s) 34-35

PMP Exam 4

Filtered Mode: Displaying 200 questions

Question 89 of 200
Question ID: 612071

The sponsor has signed the project charter, and you have been assigned to manage the project. Several employees have already been selected for the project team, and you have not worked with any of them on previous projects.

Which of the following will help build relationships between the team members?

AError! Not a valid embedded object. Creating an issue log

BError! Not a valid embedded object. Colocation

CError! Not a valid embedded object. Team performance assessments

DError! Not a valid embedded object. Observation and conversation

Question answered incorrectly

Hint:
Which of the choices is a tool for the Develop Team process?

Correct Answer: B

Explanation:

Building relationships between the team members is an important part of team development, and a cohesive team will enhance the project's performance. Many of your team members have been pre-assigned enabling you to begin team building early in the project. Placing the team in the same room, hence colocating, allows the team to build relationships with each other and develop a sense of community. While colocation is not always feasible, of the choices provided, it is the best answer to the question asked.

Details for Each Option:

AError! Not a valid embedded object. Creating an issue log

Incorrect. Issue logs are used to communicate issues on a project as well as who is responsible for resolving them and in what time frame. Issue logs help project managers effectively track and manage issues rather than assist with team building.

BError! Not a valid embedded object. Colocation

Correct. Colocation involves placing team members together in the same the same room. Having a team colocated can help them develop a sense of community and improve their communication, in turn, assist with team building. While colocation is not always feasible, of the choices provided, it is the best answer to the question asked.

CError! Not a valid embedded object. Team performance assessments

Incorrect. Team performance assessments evaluate the team's effectiveness so that actions can be taken to address any issues that may be affecting the team's efficacy. The project manager may determine more team building is required as a result of an assessment of the team, but the team performance assessments are not a team building activity.

DError! Not a valid embedded object. Observation and conversation

Incorrect. By observing the work and the project team, the project manager can proactively speak to team members about issues that might be developing. Observation and conversation are tools used to manage the team rather than develop the team.

Reference:

A Guide to the Project Management Body of Knowledge, (PMBOK® Guide) – Sixth Edition, Project Management Institute Inc., 2017, Page(s) 340

PMP Exam 4

Filtered Mode: Displaying 200 questions

Question 90 of 200
Question ID: 613788

A project manager is in the process of selecting vendors for her project. She wants to ensure that individual vendors do not receive preferential treatment and that everyone has a clear and shared understanding of the procurement.

What tool or technique will best address the project manager's need?

AError! Not a valid embedded object. Advertising

BError! Not a valid embedded object. Prequalified seller lists

CError! Not a valid embedded object. Pre-bid conferences

DError! Not a valid embedded object. Procurement management plan

Question answered incorrectly

Hint:
What type of meeting is conducted between the buyer and prospective sellers?

Correct Answer: C

Explanation:

Selecting vendors for a project implies the project manager is in the Conduct Procurements process. Bidder conferences are one of the tools and techniques of this process. Bidder conferences are also known as contractor conferences, vendor conferences, and pre-bid conferences, are meetings between the buyer and prospective sellers prior to proposal submittal. They are used to ensure that all prospective bidders have a clear and common understanding of the procurement, and no bidders receive preferential treatment.

Details for Each Option:

AError! Not a valid embedded object. Advertising

Incorrect. Advertising can be used to expand the list of potential sellers and may be required for pending government contracts. Although advertising may provide equal treatment of prospective bidders in the notification of a pending contract, it is not the best method of ensuring a clear and shared understanding of the procurement.

BError! Not a valid embedded object. Prequalified seller lists

Incorrect. Prequalified seller lists are lists of potential sellers who are previously approved. A prequalified seller list is not intended to and will not facilitate a clear and shared understanding of the procurement by the prospective bidders.

CError! Not a valid embedded object. Pre-bid conferences

Bidder conferences (also known as pre-bid conferences) are meetings between the buyer and prospective vendors/sellers prior to proposal submittal. These meetings are used to ensure that all prospective vendors/bidders have a clear and common understanding of the procurement and nobody receives preferential treatment.

DError! Not a valid embedded object. Procurement management plan

Incorrect. The procurement management plan is a component of the project management plan and not a tool or technique.

Reference:

A Guide to the Project Management Body of Knowledge, (PMBOK® Guide) – Sixth Edition, Project Management Institute Inc., 2017, Page(s) 487

PMP Exam 4

Filtered Mode: Displaying 200 questions

Question 91 of 200
Question ID: 612764

A project manager has written a charter but has been unable to get the charter approved by senior management. His manager has asked him to begin the project without the charter.

What is the best thing for the project manager to do?

AError! Not a valid embedded object. Proceed with the project, but document the lack of project charter in the risk register

BError! Not a valid embedded object. Focus on other projects that have project charters

CError! Not a valid embedded object. Start working on the project management plan

DError! Not a valid embedded object. Refuse to proceed with the project

Question answered incorrectly

Hint:
The project charter formally initiates the project.

Correct Answer: D

Explanation:

The primary purpose of the charter is to formally authorize the project and, most importantly, to provide the project manager with the authority to apply organizational resources to project activities. Without an approved charter the scope and nature of the project may not be clearly defined, or the project could progress in a direction that is not in alignment with the organization's objectives. The act of creating an approved charter shows management support for the project and the project manager. If the project starts without the project charter, the project may suffer from the lack of resources throughout its entire life cycle. The lack of resources is likely to lead to project failure which will likely be perceived as the project manager's fault. A better answer choice would be “refuse to proceed with the project and explain the impact of proceeding without an approved charter.” However, this option is not given. Therefore, of those provided, refusing to begin the project is the best answer to the question asked.

Details for Each Option:

AError! Not a valid embedded object. Proceed with the project, but document the lack of project charter in the risk register

Incorrect. Beginning the project without a charter can lead to later issues since the primary purpose of the charter is to formally authorize the project and most importantly, to provide the project manager with the authority to apply organizational resources to project activities. Documenting the lack of the project charter in the risk register will not resolve the central issue described in the scenario. Therefore, starting the project without a charter is not the best answer.

BError! Not a valid embedded object. Focus on other projects that have project charters

Incorrect. This response is an avoidance tactic, which is typically not an advisable way to handle problems, especially when the chances of project success are at stake.

CError! Not a valid embedded object. Start working on the project management plan

Incorrect. The project manager and the project team use the project charter as a starting point for initial project planning; therefore, the project charter is an input to the Develop Project Management Plan process. Since the charter is not approved, the project manager doesn't know if the information he included in the charter was accurate. It would be counterproductive to start the development of the project management plan with information that may be incorrect or incomplete. Additionally, beginning the development of the project management plan would constitute starting the project, which is not formally authorized without the approved project charter.

DError! Not a valid embedded object. Refuse to proceed with the project

Correct. While refusing to proceed the project may sound like an extreme action that could even cost the project manager his job, it is the project manager's professional responsibility to accept only those assignments that can be reasonably completed. If the project starts without the project charter, the project may suffer from the lack of resources throughout its entire life cycle leading to project failure which would most likely be considered the project manager's fault. Therefore, it is better for the project manager to fight now for the project charter rather than start the project knowing it has low chances of success.

Reference:

A Guide to the Project Management Body of Knowledge, (PMBOK® Guide) – Sixth Edition, Project Management Institute Inc., 2017, Page(s) 75-77, 81; see also The PMI Code of Ethics

and Professional Conduct, Responsibility

PMP Exam 4

Filtered Mode: Displaying 200 questions

Question 92 of 200
Question ID: 610088

A team building a radio tower has determined that the current transmitter only has a 75-mile range and requests that a more powerful transmitter be purchased to achieve the 100-mile range that is required. There is considerable pressure from stakeholders to maintain the current schedule, and the project manager knows that going through the formal, lengthy change control process would cause significant schedule delays.

What should the project manager do next?

AError! Not a valid embedded object. Purchase the required transmitter

BError! Not a valid embedded object. Submit a change request

CError! Not a valid embedded object. Re-do the equipment test

DError! Not a valid embedded object. Crash the project schedule

Question answered incorrectly

Hint:
It is a formal proposal to modify a document, deliverable, or baseline.

Correct Answer: B

Explanation:

Monitoring project work is about collecting, measuring, and assessing project information with respect to actual status, budget, and schedule. Control project work is about determining what, if any, action is needed to correct or prevent any variance in the project plan. In this scenario, the project manager has learned of a variance that will affect the project's ability to meet the approved scope which in this case is the radio tower with a 75-mile range instead of the required 100-miles range. By submitting a change request, the project manager is ensuring that only official changes are made to the scope and, when approved by the authorized body such as the change control board, only these changes are implemented. Regardless of the pressure from stakeholders to maintain the current schedule and the fact the formal change control process is lengthy, the project manager should ensure changes are handled properly according to the

organization's change control process via a change request. Hence, of the choices offered, submitting a change request is what the project manager should do next and is, therefore, the best answer to the question asked.

Details for Each Option:

AError! Not a valid embedded object. Purchase the required transmitter

> *Incorrect. There is not enough information in the question to determine if the project manager has the authority to approve and make this purchase.*

BError! Not a valid embedded object. Submit a change request

> *Correct. Problems and obstacles on projects are normal. The project manager is already doing the right thing by continuously monitoring project work at regular intervals. In this instance, a variance based on measurement has occurred, and a corrective action to replace the transmitter has been recommended. Therefore, of the choices provided, submitting a change request to replace the transmitter is what the project manager should do next.*

CError! Not a valid embedded object. Re-do the equipment test

> *Incorrect. While re-doing the equipment test may be a good idea to confirm or invalidate the test results before making such seemingly an expensive purchase, it should be assumed that the tests were properly conducted and the results are valid. Additionally, the question indicates that the engineering team has already confirmed the test results, making this answer choice a redundant and unnecessary action.*

DError! Not a valid embedded object. Crash the project schedule

> *Incorrect. Crashing is a schedule compression technique used to shorten the schedule duration for the least incremental cost by adding resources. Crashing the schedule would not address the main problem described in the scenario which is the lower than specified transmitter's range.*

Reference:

A Guide to the Project Management Body of Knowledge, (PMBOK® Guide) – Sixth Edition, Project Management Institute Inc., 2017, Page(s) 96-97, 107, 112

PMP Exam 4

Filtered Mode: Displaying 200 questions

Question 92 of 200
Question ID: 610088

A team building a radio tower has determined that the current transmitter only has a 75-mile range and requests that a more powerful transmitter be purchased to achieve the 100-mile range that is required. There is considerable pressure from stakeholders to maintain the current schedule, and the project manager knows that going through the formal, lengthy change control process would cause significant schedule delays.

What should the project manager do next?

AError! Not a valid embedded object. Purchase the required transmitter

BError! Not a valid embedded object. Submit a change request

CError! Not a valid embedded object. Re-do the equipment test

DError! Not a valid embedded object. Crash the project schedule

Question answered incorrectly

Hint:
It is a formal proposal to modify a document, deliverable, or baseline.

Correct Answer: B

Explanation:

Monitoring project work is about collecting, measuring, and assessing project information with respect to actual status, budget, and schedule. Control project work is about determining what, if any, action is needed to correct or prevent any variance in the project plan. In this scenario, the project manager has learned of a variance that will affect the project's ability to meet the approved scope which in this case is the radio tower with a 75-mile range instead of the required 100-miles range. By submitting a change request, the project manager is ensuring that only official changes are made to the scope and, when approved by the authorized body such as the change control board, only these changes are implemented. Regardless of the pressure from stakeholders to maintain the current schedule and the fact the formal change control process is lengthy, the project manager should ensure changes are handled properly according to the

organization's change control process via a change request. Hence, of the choices offered, submitting a change request is what the project manager should do next and is, therefore, the best answer to the question asked.

Details for Each Option:

AError! Not a valid embedded object. Purchase the required transmitter

> *Incorrect. There is not enough information in the question to determine if the project manager has the authority to approve and make this purchase.*

BError! Not a valid embedded object. Submit a change request

> *Correct. Problems and obstacles on projects are normal. The project manager is already doing the right thing by continuously monitoring project work at regular intervals. In this instance, a variance based on measurement has occurred, and a corrective action to replace the transmitter has been recommended. Therefore, of the choices provided, submitting a change request to replace the transmitter is what the project manager should do next.*

CError! Not a valid embedded object. Re-do the equipment test

> *Incorrect. While re-doing the equipment test may be a good idea to confirm or invalidate the test results before making such seemingly an expensive purchase, it should be assumed that the tests were properly conducted and the results are valid. Additionally, the question indicates that the engineering team has already confirmed the test results, making this answer choice a redundant and unnecessary action.*

DError! Not a valid embedded object. Crash the project schedule

> *Incorrect. Crashing is a schedule compression technique used to shorten the schedule duration for the least incremental cost by adding resources. Crashing the schedule would not address the main problem described in the scenario which is the lower than specified transmitter's range.*

Reference:

A Guide to the Project Management Body of Knowledge, (PMBOK® Guide) – Sixth Edition, Project Management Institute Inc., 2017, Page(s) 96-97, 107, 112

PMP Exam 4

Filtered Mode: Displaying 200 questions

Question 94 of 200

Question ID: 612724

You are assigned to a software development project. The product requirements are not clearly defined upfront. Therefore, it has been decided to develop the product using an agile framework. Other aspects of the project will be managed using the traditional waterfall project management approach.

Which of the following might you spend less time developing and/or implementing for this project?

AError! Not a valid embedded object. The project charter

BError! Not a valid embedded object. The issue log

CError! Not a valid embedded object. The change management plan

DError! Not a valid embedded object. The Validate Scope process

Question answered incorrectly

Hint:
What is the fundamental difference between how projects are executed with an agile framework with vague requirements versus a traditional waterfall approach with requirements defined upfront?

Correct Answer: C

Explanation:

The process of change management is fundamentally different in projects where requirements are not defined upfront warranting the use of agile methodologies to develop the product. With a waterfall approach, the requirements are typically defined upfront and, therefore, scope changes are discouraged. For such projects, a rigorous change management process is in place to ensure that change is minimized, and only the most important changes are incorporated into the project. Agile takes a different approach to change management. To provide the best value for the client, in projects where deliverables are produced using agile practices, change is anticipated and welcomed. Instead of relying on a formal process for managing change, the product owner,

which is a role responsible for managing customer requirements (backlog items), is much more involved in the planning of each iteration by providing a prioritized backlog of features for the development team to produce. A change management plan, if it is used at all, will be of little value for an agile project compared with a project using a traditional waterfall approach. The scenario presents a hybrid project where most of the project aspects are managed using the traditional project management approach, while the development of the product is carried out using agile. Agile has been selected because the requirements were not defined upfront. Therefore, of the available choices, the project team will likely spend less time developing and/or implementing the change management plan so that the frequent changes required by the customer will be easier accommodated.

Details for Each Option:

AError! Not a valid embedded object. The project charter

> *Incorrect. The project charter is a document issued by the project initiator or sponsor that formally authorizes the existence of a project and provides the project manager with the authority to apply organizational resources to project activities. The complexity of the project charter (and thus the time spent in development) is more closely related to the size and importance of the project rather than the methodology that will be used. The project charter is not fundamentally different in an agile project compared to a hybrid or traditional waterfall project.*

BError! Not a valid embedded object. The issue log

> *Incorrect. The issue log is a project document where information about issues is recorded and monitored. Issues will occur on projects regardless of the methodology that is being used. It is equally important for issues to be addressed on agile projects as it is for projects using a hybrid or waterfall approach. Therefore, there is not likely to be a significant difference in the time spent developing and implementing the issue log.*

CError! Not a valid embedded object. The change management plan

> *Correct. The change management plan is the component of the project management plan that establishes the change control board, documents the extent of its authority, and describes how the change control system will be implemented. Projects in which deliverables are build using agile practices do not typically use a change control board or have formal procedures for processing change requests. Changes are made at the discretion of the product owner rather than being controlled through a formal change management process.*

DError! Not a valid embedded object. The Validate Scope process

> *Incorrect. The Validate Scope process is the process of formalizing acceptance of the*

completed project deliverables. The process of gaining acceptance for deliverables is considerably different for pure agile projects compared with those using a waterfall approach. Agile projects hold an iteration (sprint) review at the end of each iteration (sprint) to demonstrate the increment of the product that was developed during the iteration (sprint) and gain the approval of the product owner. A waterfall approach may only seek the acceptance of deliverables at the end of the project when the product of the project is complete. Therefore, a project team is more likely to spend more, not less, time performing the Validate Scope process in an agile project compared with a waterfall approach.

Reference:

A Guide to the Project Management Body of Knowledge, (PMBOK® Guide) – Sixth Edition, Project Management Institute Inc., 2017, Page(s) 131-133; see also https://www.projectmanagement.com/articles/355615/Scope-Changes-Within-the-Agile-Scrum-Framework

---

PMP Exam 4

Filtered Mode: Displaying 200 questions

Question 95 of 200
Question ID: 614009
Following is an illustration of a project network activity node that includes some information about activity B.

Assuming that work starts on day one (not day zero) and given the information provided, what is the late finish of activity B?

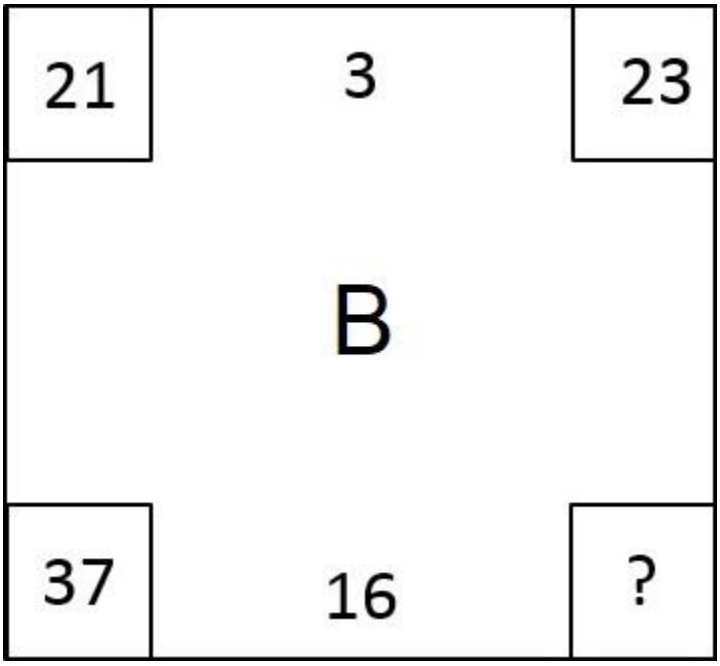

AError! Not a valid embedded object.40

BError! Not a valid embedded object.39

CError! Not a valid embedded object.37

DError! Not a valid embedded object.38

Question answered incorrectly

Hint:
Since the early finish date and total float are provided, you could use the relevant total float formula.

Correct Answer: B

Explanation:

To answer this question and compute the late finish, the first step is to understand the meaning of the values displayed on the network activity node. The accepted convention is shown below, where:

- ES = early start
- EF = early finish
- LS = late start
- LF = late finish

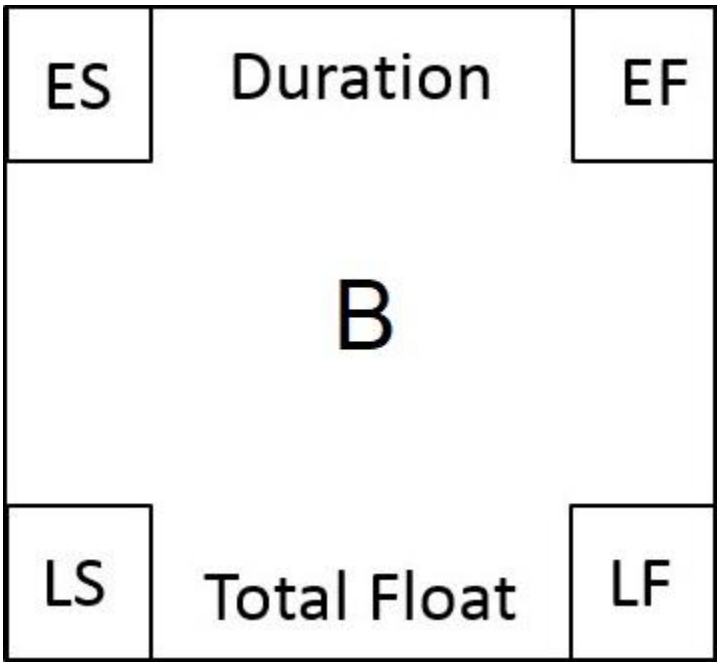

The next step is to select a formula that can be rearranged to calculate the late finish.

Total Float = LF - EF

LF = Total Float + EF = 16 + 23 = 39

Another way to calculate the LF is by simply using the given duration of the task:

LF = LS + Duration - 1 = 37 + 3 - 1 = 39

The subtruction of 1 accounts for the approach of work that starts on day 1 (not 0)

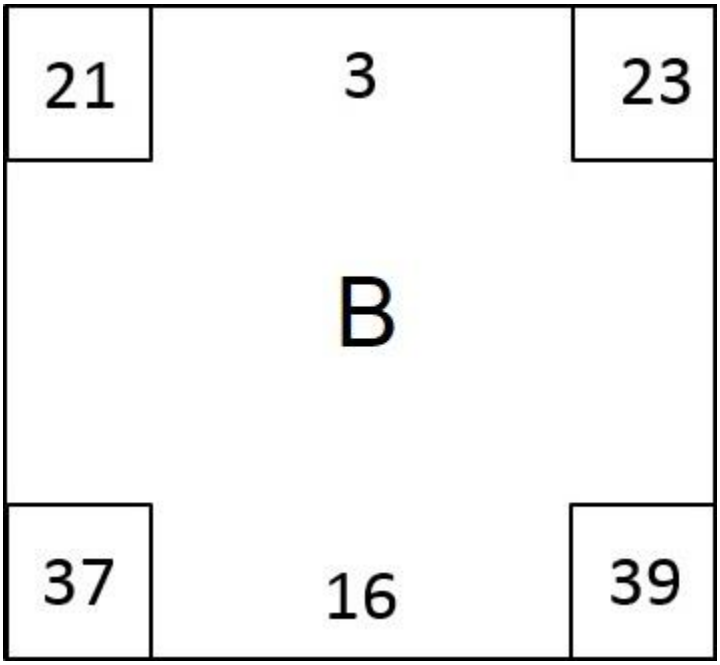

Details for Each Option:

AError! Not a valid embedded object.40

Incorrect. You might have chosen this answer if you did not account for the convention of starting work on day one, where the forward pass and backward pass formulas either add one or subtract one.

BError! Not a valid embedded object.39

Correct. You can use the values provided for both EF and Total Float in the formula Total Float = LF - EF to rearrange solve for LF.

CError! Not a valid embedded object.37

Incorrect. This answer choice represents the late start value.

DError! Not a valid embedded object.38

Incorrect. You may have chosen this answer if you incorrectly remembered the formula, subtracting one instead of adding one to account for starting work on day one.

Reference:

A Guide to the Project Management Body of Knowledge, (PMBOK® Guide) – Sixth Edition, Project Management Institute Inc., 2017, Page(s) 210-211; see also PMI® Practice Standard for Scheduling – Second Edition

---

PMP Exam 4

Filtered Mode: Displaying 200 questions

Question 96 of 200
Question ID: 612619

During execution of an agile project, a key stakeholder has been regularly contacting the development team offering suggestions. While the stakeholder's support is vital to the success of the project, the suggestions have not been particularly helpful and are distracting to the development team.

What would be the best approach for the project manager to address the issue with the key stakeholder?

AError! Not a valid embedded object. Invite the stakeholder to attend the regularly scheduled sprint planning meetings instead of contacting the development team directly

BError! Not a valid embedded object. Explain your concerns to the stakeholder and politely ask the stakeholder to discontinue all contact with the project team

CError! Not a valid embedded object. Update the stakeholder engagement assessment matrix to reflect the stakeholder's current level of engagement

DError! Not a valid embedded object. Capture the issue in the issue log and submit a change request to update the communication management plan

Question answered incorrectly

Hint:
What tool or technique associated with the Manage Stakeholder Engagement process would be most helpful in addressing the issue described by the question?

Correct Answer: A

Explanation:

Meetings are one of the tools and techniques that a project manager can use to manage stakeholder engagement. Inviting the stakeholder to attend the sprint planning meeting rather than contacting the development team directly provides a resolution which will likely help ensure the continued support of the stakeholder while removing the distraction from the project team. Sprint planning is a meeting typically used in agile projects where the determination of

what will be delivered in the upcoming sprint is made and how the work needed to deliver product increment will be achieved. Of the choices provided, the sprint planning meeting is the best place where the project team and the relevant stakeholders can get together and discuss any items related to the upcoming sprint. Suggestions from the stakeholders, such as those described in the scenario, can be best addressed at the sprint planning meeting, making this choice the best answer to the question asked.

Details for Each Option:

AError! Not a valid embedded object. Invite the stakeholder to attend the regularly scheduled sprint planning meetings instead of contacting the development team directly

> *Correct. Meetings are one of the tools and techniques that a project manager can use to manage stakeholder engagement. Inviting the stakeholder to attend the sprint planning meeting rather than contacting the development team directly provides a potential resolution which may help ensure the continued support of the stakeholder while removing the distraction from the project team, thus making this choice the best answer to the question asked.*

BError! Not a valid embedded object. Explain your concerns to the stakeholder and politely ask the stakeholder to discontinue all contact with the project team

> *Incorrect. While the action represented by this answer choice will likely resolve the distraction issue for the project team, it is likely to create friction with the key stakeholder. The question states that stakeholder's support is vital to the success of the project. It is better to negotiate with the stakeholder to find a more productive way for the stakeholder to be engaged with the project rather than asking the stakeholder to discontinue 'all' contact with the project team, no matter how politely this has been requested.*

CError! Not a valid embedded object. Update the stakeholder engagement assessment matrix to reflect the stakeholder's current level of engagement

> *Incorrect. The stakeholder engagement assessment matrix is a matrix that compares current and desired stakeholder engagement levels. While the stakeholder engagement assessment matrix should be updated to reflect any changes in stakeholder engagement levels, this action will do nothing to address the issue presented in the scenario.*

DError! Not a valid embedded object. Capture the issue in the issue log and submit a change request to update the communication management plan

> *Incorrect. The issue described by the question should be captured in the issue log. However, the question is asking for the best approach to address the issue with the key stakeholder. Capturing the information in the issue log will not, by itself, address the issue. If the question had asked what the project manager should do 'first', then this choice could*

have been a plausible option. Updating the communication management plan is a premature action as it is not clear yet what (if at all) should be updated.

Reference:

A Guide to the Project Management Body of Knowledge, (PMBOK® Guide) – Sixth Edition, Project Management Institute Inc., 2017, Page(s) 528

Live Feedback™ Back to Results

Prev Next

PMP Exam 4

Filtered Mode: Displaying 200 questions

Question 97 of 200
Question ID: 613665

A development project is behind schedule, and the project manager finds a way to bring the schedule back into alignment with the plan. The testing of the software code is scheduled to start one week after the coding is complete, so the project manager adjusts the timeline to have the software testing begin immediately after the coding is complete.

What tool or technique has the project manager used to get the schedule back on track?

AError! Not a valid embedded object. Crashing

BError! Not a valid embedded object. Fast tracking

CError! Not a valid embedded object. Leads and lags

DError! Not a valid embedded object. Earned value management

Question answered incorrectly

Hint:
What technique is exemplified by reducing or eliminating the time between the finish of one activity and the start of the subsequent activity?

Correct Answer: C

Explanation:

The question implies that the project team is performing the Control Schedule process. One of the tools and techniques that may be used during the Control Schedule process is the adjustment of leads and lags. Adjusting leads and lags can bring project activities that are behind into alignment with the plan. The question describes a scenario in which the lag time between the completion of the software code and the start of the testing has been eliminated. In this case, the elimination of the lag time is the technique that brings the schedule back into alignment with the plan.

Details for Each Option:

AError! Not a valid embedded object. Crashing

Incorrect. Crashing is a schedule compression technique which adds resources to an activity on the critical path to shorten the duration. There is no indication from the question that any resources are being added to address the schedule issue.

BError! Not a valid embedded object. Fast tracking

Incorrect. Fast tracking is a schedule compression technique in which activities normally done in sequence are performed in parallel for at least a portion of their duration. In this situation, the writing of the software code and the testing are scheduled sequentially. However, the lag time is being eliminated rather than running the activities in parallel.

CError! Not a valid embedded object. Leads and lags

Correct. Adjusting leads and lags is a technique which can be used to bring project activities that are behind into alignment with the plan. The question describes a situation in which the lag time between the completion of the software code and the start of the testing has been eliminated.

DError! Not a valid embedded object. Earned value management

Incorrect. The question implies that an earned value analysis has been performed. It was the elimination of lag time that addressed the problem with the schedule.

Reference:

A Guide to the Project Management Body of Knowledge, (PMBOK® Guide) – Sixth Edition, Project Management Institute Inc., 2017, Page(s) 228

PMP Exam 4

Filtered Mode: Displaying 200 questions

Question 98 of 200

Question ID: 613655

A project manager is estimating the length of time the project will take. The project manager worked on a comparable project two years ago that installed 10 miles of guardrails at a rate of one mile a day in similar weather conditions, using the same size crew on the same type of highway.

What estimating technique would be the appropriate option for the project manager to use for his duration estimate?

AError! Not a valid embedded object. Parametric estimating

BError! Not a valid embedded object. Analogous estimating

CError! Not a valid embedded object. Bottom-up estimating

DError! Not a valid embedded object. Three-point estimating

Question answered incorrectly

Hint:
What technique uses variables (e.g., units of output) to calculate estimates?

Correct Answer: A

Explanation:

Since the project manager has duration data from a similar project with definitive parameters, he can extrapolate the rate of producing the guardrails from the previous project to arrive at an estimate for the new project. This estimation technique is called parametric estimating. Parametric estimating can be used during the Estimate Activity Durations process, which is what is described in the question scenario. For example, since the previous project was able to install one mile of guardrail over 10 days, he could estimate that five miles of guardrail will take 50 days to install.

Details for Each Option:

AError! Not a valid embedded object. Parametric estimating

Correct. Parametric estimating uses an algorithm to calculate duration based on historical data and project parameters. Since the project manager has the duration parameters from previous projects, he can use them to calculate a duration estimate for this project. Parametric estimating can provide high levels of accuracy depending on the complexity of the variables.

BError! Not a valid embedded object. Analogous estimating

Incorrect. A good option, but parametric estimating is a better choice because the project manager has comparable parameters to more accurately calculate the estimate. Analogous estimating is a gross-level estimating technique which relies on the actual duration of previous, similar projects. Also, analogous estimating is generally less accurate than other estimating techniques.

CError! Not a valid embedded object. Bottom-up estimating

Incorrect. Bottom-up estimating is a method of estimating duration by aggregating the estimates of the lower level components of the work breakdown structure. Bottom-up estimating is typically used when estimates cannot be made with a high degree of confidence. Since the project manager has duration data from a similar project with definitive parameters that allow him to provide estimates with a high degree of confidence, bottom-up estimating is not the best answer in this scenario.

DError! Not a valid embedded object. Three-point estimating

Incorrect. Three-point estimating helps determine an estimated range using most likely, optimistic and pessimistic values. This method is usually used when there is insufficient historical data or when using judgmental data. Parametric estimating is a better choice because the project manager does have definitive parameters that allow him to provide an estimate with a high degree of confidence.

Reference:

A Guide to the Project Management Body of Knowledge, (PMBOK® Guide) – Sixth Edition, Project Management Institute Inc., 2017, Page(s) 200

PMP Exam 4

Filtered Mode: Displaying 200 questions

Question 99 of 200
Question ID: 612134

A project team will work in a noisy environment requiring hearing protection. To communicate in this type of environment, your employer has a mandatory proprietary instant messaging mobile phone application that will be installed on the phone of every project team member for the duration of the project.

This application is an example of which of the following?

AError! Not a valid embedded object. Pull communication

BError! Not a valid embedded object. Push communication

CError! Not a valid embedded object. Enterprise environmental factors

DError! Not a valid embedded object. Communication model

Question answered incorrectly

Hint:
The instant messaging application is a mandatory communication tool.

Correct Answer: C

Explanation:

The scenario describes the use of a proprietary instant messaging application that, according to your organization, is a mandatory tool to be used for communications under certain circumstances, for example when the employees perform project work in a noisy remote environment. While the use of the instant messaging application on the mobile phones may lead you to think the question is talking about communication technology, communication models, or communication methods, the word ‘mandatory’ should trigger the thought of enterprise environmental factors. Any condition, not under the immediate control of the team that influences, constraints, or directs the project is an enterprise environmental factor (EEF). Established communication channels, tools, and systems are an example of the EEF. Since the instant messaging application is defined as ‘mandatory’ by your organization, meaning it is outside the project team's control, the application qualifies as an EEF, in particular as an

established communication tool. Therefore, of the choices provided, enterprise environmental factors is the best answer to the question asked. Please read the questions carefully to choose the best answer. It is easy to miss one word which might be the keyword in selecting the correct answer.

Details for Each Option:

AError! Not a valid embedded object. Pull communication

> *Incorrect. Pull communication is a type of communication method that requires recipients to access content at their discretion. This method is typically used for large audiences or complex data sets. The instant messaging application described in the scenario does not represent a pull communication method.*

BError! Not a valid embedded object. Push communication

> *Incorrect. Push communication is a type of communication method where information is distributed to specific recipients. This method ensures the information is sent but does not guarantee the information was received or understood by the recipient. The instant messaging application described in the scenario provides an exchange of information in real time allowing prompt feedback and is, therefore, not a type of push communication.*

CError! Not a valid embedded object. Enterprise environmental factors

> *Correct. The scenario implies you are carrying out the Plan Communications Management process. Enterprise environmental factors are an input to that process. Enterprise environmental factors are conditions, not under the immediate control of the team, that influence, constrain, or direct the project. The scenario describes an instant messaging application that is mandated by your organization to be used for communication. 'Mandatory' means the application is not under the immediate control of the team, making the application an enterprise environmental factor.*

DError! Not a valid embedded object. Communication model

> *Incorrect. Communication models represent the communication process in general, rather than a specific communication application described in the scenario.*

Reference:

A Guide to the Project Management Body of Knowledge, (PMBOK® Guide) – Sixth Edition, Project Management Institute Inc., 2017, Page(s) 368, 370

PMP Exam 4

Filtered Mode: Displaying 200 questions

Question 100 of 200
Question ID: 612608

To keep stakeholders engaged with and supportive of a project, the project manager wants to prepare a reporting package to allay their fears on the progress that the project has made thus far. To prepare this package, the project manager needs to understand the risk appetites and reporting formats.

What should the project manager do to find this information?

AError! Not a valid embedded object. Review the communications management plan

BError! Not a valid embedded object. Look in the risk management plan

CError! Not a valid embedded object. Consult the risk register

DError! Not a valid embedded object. Check the risk repository

Question answered incorrectly

Hint:
Where are the risk categories, risk appetites, and reporting formats that can be used to manage stakeholder engagement documented?

Correct Answer: B

Explanation:

The question suggests that the project manager wants to carry out the Manage Stakeholder Engagement process. The risk management plan is an input to this process and describes the risk categories, risk appetites, and reporting formats that can be used to manage stakeholder engagement.

Details for Each Option:

AError! Not a valid embedded object. Review the communications management plan

Incorrect. The communications management plan describes the methods, formats, and technologies used for stakeholder communication. While the communications management plan provides information on how reporting should be communicated to stakeholders, it does not provide guidance on risk appetites or reporting formats that can be used to manage stakeholder engagement.

BError! Not a valid embedded object. Look in the risk management plan

Correct. The risk management plan describes the risk categories, risk appetites, and reporting formats that can be used to manage stakeholder engagement, thus accurately answering the question asked.

CError! Not a valid embedded object. Consult the risk register

Incorrect. The risk register contains a list of identified risks, potential risk owners, and potential risk responses. The risk register does not provide information on risk appetites or reporting formats that can be used to manage stakeholder engagement.

DError! Not a valid embedded object. Check the risk repository

Incorrect. 'Risk repository' is a fake term made up for this question.

Reference:

A Guide to the Project Management Body of Knowledge, (PMBOK® Guide) – Sixth Edition, Project Management Institute Inc., 2017, Page(s) 525

PMP Exam 4

Filtered Mode: Displaying 200 questions

Question 101 of 200
Question ID: 612091

A current project is much larger in size and complexity compared to the previous projects that the project manager has managed. To save time and effort, the project manager uses the risk management plan and risk register from a historical project as a template. During project execution, several unexpected high-impact risks were realized, which derailed the project and caused its termination before completion.

What most likely caused the project to be terminated?

AError! Not a valid embedded object. Using templates to create the risk management plan and risk register

BError! Not a valid embedded object. Failing to implement the agreed-upon risk responses

CError! Not a valid embedded object. Lack of tailoring of the risk management plan and risk register

DError! Not a valid embedded object. Propinquity was too high during project planning

Question answered incorrectly

Hint:
How might the project's size and complexity affect the way Project Risk Management processes are applied?

Correct Answer: C

Explanation:

Because each project is unique, it is necessary to tailor the way Project Risk Management processes are applied to a project. Project size and complexity have a direct impact on overall project risk. A large and complex project requires a more robust risk management plan and a more detailed risk register to address the increased level of overall project risk. The outcomes of these tailoring decisions are recorded in the risk management plan. Using the risk management plan and risk register from a previous project as a template for a larger and more complex project without tailoring would likely result in the realization of risks without adequate response plans, which may jeopardize the project's objectives. Therefore, of the available choices, the lack of

tailoring of the risk management plan is what most likely caused the project to be terminated before completion.

Details for Each Option:

AError! Not a valid embedded object. Using templates to create the risk management plan and risk register

> *Incorrect. The use of templates is a project management best practice to save time and effort. Templates might be found as part of the organizational process assets or derived from past similar projects. While using templates is an excellent idea, the templates used for risk management must be tailored to the size and complexity of the project.*

BError! Not a valid embedded object. Failing to implement the agreed-upon risk responses

> *Incorrect. The question states that the high-impact risks that were encountered by the project were unexpected, which suggests that these risks were not previously identified. Any potential risk responses, which were planned & agreed-upon, were not applicable, as they pertained to other risks.*

CError! Not a valid embedded object. Lack of tailoring of the risk management plan and risk register

> *Correct. Project size and complexity have a direct impact on overall project risk. A large and complex project will require a more robust risk management plan and a more detailed risk register.*

DError! Not a valid embedded object. Propinquity was too high during project planning

> *Incorrect. Propinquity is the degree to which the risk is perceived to matter by one or more stakeholders. High propinquity is more likely to lead to a more robust risk management plan and more thorough identification of risks along with well-developed risk responses. In this scenario, the project encountered several unexpected, high-impact risks, which implies that propinquity was low, not too high, compared to the actual risk faced by the project.*

Reference:

A Guide to the Project Management Body of Knowledge, (PMBOK® Guide) – Sixth Edition, Project Management Institute Inc., 2017, Page(s) 400

PMP Exam 4

Filtered Mode: Displaying 200 questions

Question 102 of 200
Question ID: 613690

You and your project team have just completed defining the scope for your project and are now in the process of decomposing the scope statement to create the work breakdown structure (WBS). Some of the deliverables will be produced later in the project and cannot be entirely decomposed at this time.

When you have completed the process of creating the WBS, your scope baseline will include which of the following components?

AError! Not a valid embedded object. Project scope statement, WBS, and activity attributes

BError! Not a valid embedded object. Project scope statement, WBS, WBS dictionary, and activity list

CError! Not a valid embedded object. Project scope statement, activity list, and activity attributes

DError! Not a valid embedded object. Project scope statement, work packages, and planning packages

Question answered incorrectly

Hint:
The WBS is created by decomposing the project deliverables into smaller parts. What are these smaller parts called?

Correct Answer: D

Explanation:

The output of the Create WBS process is the approved version of the scope baseline which includes a scope statement, WBS, work package, planning package, and WBS dictionary. Typically, one thinks of a scope baseline as the scope statement, WBS, and WBS dictionary. But when asked about scope baseline components, one must include the work packages and planning packages which provide the structure for the control accounts. Scope, budget, and schedule are integrated and used for performance measurement at management control points called control accounts which are noted in the WBS. Therefore, the answer that included the work package and planning package is correct.

Note, the correct answer is incomplete. It includes only some of the components of the scope baseline. However, the incorrect answer choices contain components that are not part of the scope baseline at all. Therefore, as we always recommend, of the options provided, select the one that is better than the others even if that option is not an ideal/perfect answer or the answer you would like to see as the correct one.

Details for Each Option:

AError! Not a valid embedded object. Project scope statement, WBS, and activity attributes

> *Incorrect. The project scope statement and WBS are components of the scope baseline, which is the main output from the Create WBS process described in the scenario. Activity attributes are an output from the Define Activities process.*

BError! Not a valid embedded object. Project scope statement, WBS, WBS dictionary, and activity list

> *Incorrect. The project scope statement, WBS, and WBS dictionary are components of the scope baseline, which is the main output from the Create WBS process described in the scenario. The activity list is an output from the Define Activities process.*

CError! Not a valid embedded object. Project scope statement, activity list, and activity attributes

> *Incorrect. The activity list and activity attributes are outputs of the Define Activities process, while the question describes the Create WBS process.*

DError! Not a valid embedded object. Project scope statement, work packages, and planning packages

> *Correct. Components of the scope baseline include the project scope statement, WBS, work packages, planning packages, and WBS dictionary. While this answer choice is incomplete, of the choices provided, it is still the best answer to the question asked.*

Reference:

A Guide to the Project Management Body of Knowledge, (PMBOK® Guide) – Sixth Edition, Project Management Institute Inc., 2017, Page(s) 161-162

PMP Exam 4

Filtered Mode: Displaying 200 questions

Question 103 of 200
Question ID: 613793

You are managing a project for a grocery store that is upgrading their retail management system. Your company contracts with a vendor for the supply, installation, and configuration of the point of sale systems. You have met with the seller to inspect the completed installation of the point of sale systems and have found they meet the technical and quality requirements outlined in the contract. The seller has received the final payment.

What should you do next?

AError! Not a valid embedded object. Perform a procurement audit

BError! Not a valid embedded object. Close the project

CError! Not a valid embedded object. Provide the seller with formal written notice that the contract has been completed

DError! Not a valid embedded object. Issue a work performance report

Question answered incorrectly

Hint:
What is required to close a procurement?

Correct Answer: C

Explanation:

When a seller has provided the product or service defined by the procurement contract, the procurement is closed. Requirements for formal procurement closure are usually specified in the terms and conditions of the agreement and are included in the procurement management plan. Typically, to close a procurement, all deliverables should have been provided and inspected to ensure they meet technical and quality requirements, there should be no outstanding claims or invoices, and all final payments should have been made. In the final step of closing a procurement contract, the buyer provides the seller with formal written notice that the contract has been completed.

Details for Each Option:

AError! Not a valid embedded object. Perform a procurement audit

Incorrect. Procurement audits are performed during the life of the procurement contract to ensure the procurement is complying with organizational policies, procedures, and processes. In this scenario, the contract is in the process of being finalized so an audit would typically have been done earlier. Therefore, this is an incorrect answer.

BError! Not a valid embedded object. Close the project

Incorrect. The contract for the point of sale systems is being finalized. There is no indication that the entire project is complete. Therefore, closing the project is not the best answer.

CError! Not a valid embedded object. Provide the seller with formal written notice that the contract has been completed

Correct. In this scenario, you have inspected the completed installation of the point of sale systems, indicating the procurement is being formally closed. To complete procurement closure, the buyer provides the seller with formal written notice that the contract has been completed.

DError! Not a valid embedded object. Issue a work performance report

Incorrect. Work performance reports are the organized physical representation of work performance information. Work performance reports are distributed, as an output from Monitor and Control Project Work, to stakeholders who need to receive the information. In this scenario, you are in the process of completing a procurement. Therefore, issuing a work performance report is not your next step.

Reference:

A Guide to the Project Management Body of Knowledge, (PMBOK® Guide) – Sixth Edition, Project Management Institute Inc., 2017, Page(s) 499

PMP Exam 4

Filtered Mode: Displaying 200 questions

Question 104 of 200
Question ID: 651438

You are managing a project where several risks have been identified. For low-priority threats, you decide to forgo the development of risk responses and only establish contingency reserves.

What risk strategy are you using in this situation?

AError! Not a valid embedded object. Mitigation

BError! Not a valid embedded object. Acceptance

CError! Not a valid embedded object. Transfer

DError! Not a valid embedded object. Avoidance

Question answered incorrectly

Hint:
The project manager acknowledges the existence of the threat but does not take proactive action.

Correct Answer: B

Explanation:

The scenario implies you are in the Plan Risk Responses process. Various strategies to address threats can be used as part of this process, including escalation, avoidance, transference, mitigation, and acceptance. Risk acceptance acknowledges the existence of a threat, but no proactive action is taken. Acceptance may be passive, where no action other than monitoring is involved, or active where an action is taken to handle the risk if it becomes an issue. The most common active acceptance strategy is to establish a contingency reserve to address the threat if it occurs. It may be argued that setting aside a contingency reserve is a mitigating activity because the impact has been factored into the budget. But that is not the same as taking action to reduce impact or probability. More importantly, establishing contingency reserves for low-priority threats is exactly what has been described in the question, making acceptance a better choice. You must always select the best answer and not one that may be or seem correct.

Details for Each Option:

AError! Not a valid embedded object. Mitigation

Incorrect. Risk mitigation involves an action being taken to reduce the probability of occurrence and/or impact of a threat. In the question, you have taken no direct action to reduce the probability or the impact if the risk occurs. You have simply set aside reserves to address the impact if the risk becomes an issue. This is not the same as taking steps to reduce impact like targeting those factors that will reduce the severity of the impact.

BError! Not a valid embedded object. Acceptance

Correct. Risk acceptance acknowledges the existence of a threat, but no proactive action is taken. This strategy may be appropriate for the low-priority threats that are mentioned in the question. The most common active acceptance strategy is to establish a contingency reserve to address the threat if it occurs. This is exactly the strategy described in the question, making acceptance the best answer choice.

CError! Not a valid embedded object. Transfer

Incorrect. The transfer involves shifting ownership of a threat to a third party to manage the risk and to bear the impact if the threat occurs. Nothing in the scenario suggests that the ownership of the threats has been shifted.

DError! Not a valid embedded object. Avoidance

Incorrect. Risk avoidance is a strategy that may be appropriate for high-priority threats with a high probability of occurrence which would have a large negative impact. The question describes the strategy for low priority risks which make this answer incorrect since avoidance is not appropriate for low priority threats.

Reference:

A Guide to the Project Management Body of Knowledge, (PMBOK® Guide) – Sixth Edition, Project Management Institute Inc., 2017, Page(s) 443

PMP Exam 4

Filtered Mode: Displaying 200 questions

Question 105 of 200
Question ID: 612504

Who can terminate a contract on a project?

AError! Not a valid embedded object. Either party before the start of work

BError! Not a valid embedded object. The buyer before the start of work

CError! Not a valid embedded object. Either party by mutual consent

DError! Not a valid embedded object. Early termination is not an option

Question answered incorrectly

Hint:
Under what circumstances can a contract be changed or terminated?

Correct Answer: C

Explanation:

Agreements can be amended at any time before contract closure by mutual consent, in accordance with the change control terms of the agreement. The rights and obligations of both parties will be captured in the terms and conditions of the contract. The contract terms may or may not provide circumstances that provide relief from contractual obligations along with any associated penalties. Without knowing the terms of the agreement, of the choices provided, contract termination by the mutual consent is the best answer to the question asked.

Details for Each Option:

AError! Not a valid embedded object. Either party before the start of work

> *Incorrect. Both parties are bound by the terms of the contract. Unless the contract specifically states that either party can terminate the contract before the start of work, the agreement is enforceable. Since the question does not provide any information on the*

contract terms, this is not the best answer choice.

BError! Not a valid embedded object. The buyer before the start of work

Incorrect. The buyer may be able to terminate the contract before the start of work, but only if that right is provided in the agreement. The terms of the contract will also outline any penalties associated with early termination. The question does not provide any information on an early termination clause which makes another choice a better answer to the question asked.

CError! Not a valid embedded object. Either party by mutual consent

Correct. Agreements can be amended at any time before contract closure by mutual consent, in accordance with the change control terms of the agreement. If the early termination clause is not provided in the contract, this clause can be amended by mutual consent.

DError! Not a valid embedded object. Early termination is not an option

Incorrect. Agreements can be amended or terminated by mutual agreement. The contract terms may also specify other circumstances in which the contract may be terminated before closure along with any penalties that may be associated with early termination.

Reference:

A Guide to the Project Management Body of Knowledge, (PMBOK® Guide) – Sixth Edition, Project Management Institute Inc., 2017, Page(s) 494

PMP Exam 4

Filtered Mode: Displaying 200 questions

Question 106 of 200
Question ID: 612479

You are leading a construction project that involves a vendor. A team member tells you that based on the rough assessment of the vendor's current work in progress, she suspects that the vendor will be unable to complete their work on time. You share your concerns with the vendor, but they claim that they are progressing as planned.

What is your best course of action to ensure a mutual understanding of the work in progress?

AError! Not a valid embedded object. Conduct a walkthrough

BError! Not a valid embedded object. Perform an earned value analysis (EVA)

CError! Not a valid embedded object. Conduct an audit

DError! Not a valid embedded object. Resort to alternative dispute resolution (ADR)

Question answered incorrectly

Hint:
This tool/technique is also called an inspection.

Correct Answer: A

Explanation:

The question suggests that the Control Procurements process is underway. An inspection, as it relates to the Control Procurements process, is a structured review of the work being performed by the vendor. The inspection may involve a simple review of the deliverables or an actual physical review of the work itself. On a construction project, inspections may involve walkthroughs of the site by both the buyer and the vendor to ensure a mutual understanding of the work in progress.

One may argue that the team member has the figures of the work in progress, allowing the implementation of the earned value analysis (EVA), and, hence, making the EVA a better answer choice. This is not the case, since, according to the scenario, the team member has only a 'rough' assessment of the vendor's current work in progress, and she 'suspects' that the vendor will be

unable to complete the work on time. Project managers should not act on suspicions. Facts should be checked, making a walkthrough a better answer.

Details for Each Option:

AError! Not a valid embedded object. Conduct a walkthrough

> *Correct. An inspection is a structured review of the work being performed by the vendor. On a construction project, inspections may involve walkthroughs of the site by both the buyer and the vendor to ensure a mutual understanding of the work in progress.*

BError! Not a valid embedded object. Perform an earned value analysis (EVA)

> *Incorrect. In order to perform an earned value analysis (EVA), you, as the project manager, must first have a clear understanding of the progress which has been completed. In this scenario, the status of the work in progress is in dispute and, therefore, is unknown.*

CError! Not a valid embedded object. Conduct an audit

> *Incorrect. As they pertain to procurements, audits are a structured review of the procurement process. According to the scenario, you are concerned with the work in progress carried out by the vendor rather than with how well the procurement process has been managed on your project.*

DError! Not a valid embedded object. Resort to alternative dispute resolution (ADR)

> *Incorrect. ADR is aimed to address contested changes on projects where the buyer and seller cannot reach an agreement on compensation for the change or cannot agree that a change has occurred. Based on the scenario described, resorting to ADR is premature at this point.*

Reference:

A Guide to the Project Management Body of Knowledge, (PMBOK® Guide) – Sixth Edition, Project Management Institute Inc., 2017, Page(s) 498

PMP Exam 4

Filtered Mode: Displaying 200 questions

Question 107 of 200
Question ID: 612533

Your company's PMO has launched an information dashboard that can be used to share project communications with stakeholders. The dashboard will display the same information you have currently been distributing on your project but in a more visual, easy, and quick to read format. You decide to try the dashboard for communications with a select list of stakeholders.

What should you do next?

AError! Not a valid embedded object. Submit a change request to update the stakeholder engagement plan

BError! Not a valid embedded object. Submit a change request to update the stakeholder register

CError! Not a valid embedded object. Update the communications management plan

DError! Not a valid embedded object. Update the lessons learned register

Question answered incorrectly

Hint:
What is required to update the project management plan?

Correct Answer: A

Explanation:

The decision to utilize a different tool, technique, method, or strategy, for communication with stakeholders requires an update to both the communications management plan and the stakeholder engagement plan. Updates to these plans are among the outputs of the Manage Communications process described in the scenario. However, before a change can be made to any component of the project management plan, an approved change request is required. The change request is key to choosing the correct answer. Ideally, we would like to see an answer choice of requesting a change request for updates to both the communications management plan and the stakeholder engagement plan. However, this option is not provided. Two answer choices partially address the question asked, but neither of them does it thoroughly. Therefore, we have to select the better of the two options. Of the available choices, submitting a change request to

update the stakeholder management plan is the best answer to the question asked because the solution includes the change request. It is essential to read all the answer options first before selecting your answer. Sometimes one answer is just a little bit better.

Note, the determination that the project is in execution can be made based on the following part of the question: "The dashboard will present the same information you have currently been distributing on your project..." Since the project is in execution, it is assumed that the project management plan has already been approved and, therefore, any modification to it requires an approved change request.

Details for Each Option:

AError! Not a valid embedded object. Submit a change request to update the stakeholder engagement plan

> *Correct. Any changes to stakeholder communication strategies and agreed-upon communication strategies would require an update to the stakeholder engagement plan. Updating the stakeholder engagement plan requires an approved change request first.*

BError! Not a valid embedded object. Submit a change request to update the stakeholder register

> *Incorrect. You might want to update the stakeholder register to reflect the use of the dashboard with specific stakeholders. However, the stakeholder register is not a controlled document (unless stated otherwise in the question) and, therefore, does not require an approved change request to be updated.*

CError! Not a valid embedded object. Update the communications management plan

> *Incorrect. Since you want to make a change to the project communications approach, you would need to update the communications management plan. However, any change to an approved project management plan needs to go through the organization's change control process via a change request. The communications management plan is a component of the project management plan and, therefore, would require an approved change request before it can be updated.*

DError! Not a valid embedded object. Update the lessons learned register

> *Incorrect. The lessons learned register is a project document that captures knowledge gained during a project so that it can be beneficial to the remainder of the project. At the end of the project, the lessons learned register is transferred to the lessons learned repository for use on future projects. If the use of the dashboard proves to be a better way to communicate with project stakeholders, this information can be captured in the lessons learned register. However, since you have not yet proven the dashboard use successful,*

updating the lessons learned register is premature.

Reference:

A Guide to the Project Management Body of Knowledge, (PMBOK® Guide) – Sixth Edition, Project Management Institute Inc., 2017, Page(s) 387

Live Feedback™ Back to Results

Prev Next

PMP Exam 4

Filtered Mode: Displaying 200 questions

Question 108 of 200
Question ID: 612569

You are leading a project to research, develop, design, and manufacture a new internal combustion engine. With the design phase complete, it has become evident that the new engine, although more fuel efficient, is not a viable product due to very high anticipated manufacturing costs.

What should you do next?

AError! Not a valid embedded object. Continue with the project as originally planned

BError! Not a valid embedded object. Submit a change request to update the cost baseline

CError! Not a valid embedded object. Recommend the termination of the project

DError! Not a valid embedded object. Start the Close Project or Phase process.

Question answered incorrectly

Hint:
The project objectives cannot be met.

Correct Answer: C

Explanation:

The question states that the new engine is not a viable product due to high manufacturing costs. This situation implies that the project objective of producing a viable product cannot be met. When the project objectives cannot be met, the best course of action is to terminate the project. Even though the project should be terminated in this scenario, a project manager lacks the authority to terminate a project. However, a project manager can recommend the termination of a project. Therefore, of the available answer choices, recommending the termination of the project is the best answer to the question asked.

Details for Each Option:

AError! Not a valid embedded object. Continue with the project as originally planned

Incorrect. The question indicates that the product under development is not a viable product. Since the project objectives cannot be met, there is no reason to continue the project as originally planned.

BError! Not a valid embedded object. Submit a change request to update the cost baseline

Incorrect. The question suggests that the project objective of producing a viable product cannot be met. Increasing the cost baseline will not make the product competitive in the marketplace. Therefore, there is no reason to continue spending company resources to develop the product further.

CError! Not a valid embedded object. Recommend the termination of the project

Correct. This situation implies that the project objective of producing a viable product cannot be met. When the project objectives cannot be met, the best course of action is to terminate the project.

DError! Not a valid embedded object. Start the Close Project or Phase process.

Incorrect. The project will likely be terminated in this scenario, which will then trigger the Close Project or Phase process. However, a project manager cannot terminate the project and start the Close Project or Phase process without prior authorization.

Reference:

A Guide to the Project Management Body of Knowledge, (PMBOK® Guide) – Sixth Edition, Project Management Institute Inc., 2017, Page(s) 5, 542

PMP Exam 4

Filtered Mode: Displaying 200 questions

Question 109 of 200

Question ID: 613104

A project manager is assigned to a research and development project for an external client and is currently in the process of developing a list of potential stakeholders. The project is still in the initiation stage, and the project charter has yet to be approved. The project manager has already reviewed an early draft of the project charter and consulted the business documents to find potential stakeholders.

What else might the project manager do to identify stakeholders?

AError! Not a valid embedded object. Look at the stakeholder register

BError! Not a valid embedded object. Review the contract

CError! Not a valid embedded object. Research the business case

DError! Not a valid embedded object. Read the stakeholder engagement plan

Question answered incorrectly

Hint:

What source of information regarding the identification of stakeholders is available at the stage of the project described by the question?

Correct Answer: B

Explanation:

The question implies that the initial pass of the Identify Stakeholders is being performed. The question also indicates that the project is being undertaken for the benefit of an external client. As such, a contract should be in place which defines the agreement between the performing organization and the client. The parties to the agreement are project stakeholders, and the agreement may contain references to additional stakeholders. The incorrect answer choices represent sources of information that have already been reviewed or have not yet been developed at the initiation stage of the project. Therefore, of the available choices, reviewing the contract is the best answer to the question asked.

Details for Each Option:

AError! Not a valid embedded object. Look at the stakeholder register

Incorrect. The question implies that the project manager is performing the initial pass of the Identify Stakeholders process. The stakeholder register is the main output of the Identify Stakeholders process. The stakeholder register does not exist until the Identify Stakeholder process is complete and is not yet available to serve as a source of information.

BError! Not a valid embedded object. Review the contract

Correct. The question indicates that the project is being undertaken for an external client. As such, a contract should be in place which defines the agreement between the performing organization and the client. The parties to the agreement are project stakeholders, and the agreement may contain references to additional stakeholders.

CError! Not a valid embedded object. Research the business case

Incorrect. The business documents include the business case and the benefits management plan. The question states that the project manager has already reviewed the business documents and the business case by extension. Therefore, researching the business case would be a redundant and unnecessary activity.

DError! Not a valid embedded object. Read the stakeholder engagement plan

Incorrect. The question states that the project charter has yet to be approved. Project planning cannot begin until the project charter has been approved by the project sponsor. The stakeholder engagement plan is a component of the project management plan and is developed during the planning stage of the project. Therefore, the stakeholder engagement plan does not yet exist to serve as a source of information for identifying stakeholders.

Reference:

A Guide to the Project Management Body of Knowledge, (PMBOK® Guide) – Sixth Edition, Project Management Institute Inc., 2017, Page(s) 510

PMP Exam 4

Filtered Mode: Displaying 200 questions

Question 110 of 200
Question ID: 613128

You are leading a project to renovate and convert a historic building into condominiums. After some demolition, asbestos insulation was discovered. This came as a surprise to the project team. To address the issue, the team recommends some scope changes. However, with the cost of these changes, the budget at completion cannot be met. A change request has been submitted and approved.

What should you do next?

AError! Not a valid embedded object. Update the cost baseline as outlined in the approved change request

BError! Not a valid embedded object. Use contingency reserves allocated for the risk of asbestos insulation

CError! Not a valid embedded object. Terminate the project since original project objectives cannot be met

DError! Not a valid embedded object. Do not implement the change and proceed as originally planned

Question answered incorrectly

Hint:
The project budget includes the management reserves and cost baseline.

Correct Answer: A

Explanation:

The scenario describes an unknown risk that requires changes in scope. In other words, the scenario suggests that the Control Scope process is being carried out. Various components of the project management plan may be updated as a result of this process. The cost baseline is one of them. Changes to the cost baseline are incorporated in response to approved changes in scope, resources, or cost estimates. In this case, scope changes recommended by the team have been approved. The question does not describe all of the changes which were requested. However, at a minimum, and with the given set of the answer choices, the cost baseline must be updated since

the question specifically states that the original budget at completion cannot be met. Therefore, of the available choices, updating the cost baseline as outlined by the approved change request is what you, as the project manager should do next.

Details for Each Option:

AError! Not a valid embedded object. Update the cost baseline as outlined in the approved change request

> *Correct. The question does not describe all of the changes which were requested. However, at a minimum, the cost baseline must be updated since the question states that the original budget was no longer attainable.*

BError! Not a valid embedded object. Use contingency reserves allocated for the risk of asbestos insulation

> *Incorrect. Contingency reserves are allocated for identified risks. According to the scenario, asbestos insulation came as a surprise to the project team, implying this risk has not been identified earlier in the project, and therefore no contingency reserves have been allocated.*

CError! Not a valid embedded object. Terminate the project since original project objectives cannot be met

> *Incorrect. The question states that the resulting change request was approved. Therefore, the project will proceed with a new cost baseline as well as any other approved changes. Additionally, you, as a project manager, does not have the authority to terminate a project.*

DError! Not a valid embedded object. Do not implement the change and proceed as originally planned

> *Incorrect. While not every change must be immediately implemented, proceeding as originally planned under the circumstances described in the scenario may be perceived as simply ignoring the issue. The change has been submitted, project resources have been spent to evaluate and decide on the change. The change request was eventually approved. The next logical step for the project manager would be implementing the change rather than proceeding with the project as originally planned.*

Reference:

A Guide to the Project Management Body of Knowledge, (PMBOK® Guide) – Sixth Edition, Project Management Institute Inc., 2017, Page(s) 171

PMP Exam 4

Filtered Mode: Displaying 200 questions

Question 111 of 200
Question ID: 612127

A project manager suspects that duplicate testing performed by one of the company's departments is why the project is behind schedule. The department manager explains that two testing cycles are departmental policy to ensure the highest quality possible.

What should the project manager do to find the reason for the project to fall behind schedule?

AError! Not a valid embedded object. Do nothing and let the department continue with their practice

BError! Not a valid embedded object. Perform data analysis using an Ishikawa diagram

CError! Not a valid embedded object. File a formal complaint to the project management office (PMO)

DError! Not a valid embedded object. Adjust the project schedule to reflect the delays

Question answered incorrectly

Hint:
The project manager should look for the root cause of the issue so that it can be corrected.

Correct Answer: B

Explanation:

The project manager's conversation with the department manager suggests the possible cause for the department's slow progress is the duplicate testing policy; however, it is just an assumption. The project manager needs to be proactive and take action. An Ishikawa diagram, which can be used for data analysis, is also known as a cause-and-effect diagram, fishbone diagram, or why-why diagram. This type of diagram breaks down the causes of the problem statement into discrete branches, e.g., activities taking longer than planned, helping to identify the primary or root cause of the problem. Using an Ishikawa diagram will help determine the real root cause for the project to fall behind schedule. This could be the duplicate testing or something else. The root cause analysis will help determine the real underlying reason and enable the project manager to make an informed decision on what actions are required to fix the problem.

Details for Each Option:

AError! Not a valid embedded object. Do nothing and let the department continue with their practice

> *Incorrect. Doing nothing and letting the department continue their practice of duplicate testing will likely keep the project behind schedule. At this point, the project manager 'suspects' the duplicate testing is the cause of the project delay. To confirm (or reject) this suspicion, an analysis should be made.*

BError! Not a valid embedded object. Perform data analysis using an Ishikawa diagram

> *Correct. A good project manager is proactive and should look for a root cause and solution for a problem even if it means trying to improve another department's processes. An Ishikawa or cause-and-effect diagram can be used to identify the root cause of the department's slow progress. The schedule delay may or may not be due to the duplicate testing being done by that department.*

CError! Not a valid embedded object. File a formal complaint to the project management office (PMO)

> *Incorrect. First, it is unclear what role (supportive, controlling, or directive) does the PMO play in the organization. Second, regardless of the role, filing a complaint (either formal or informal) does not sound like a reasonable action or an acceptable project management practice under the circumstances described by the scenario.*

DError! Not a valid embedded object. Adjust the project schedule to reflect the delays

> *Incorrect. Merely adjusting the schedule would not help the project manager determine the real reason for why the project is behind schedule. The project manager should look for the root cause of the problem and attempt to fix it, rather than react and adjust the schedule.*

Reference:

A Guide to the Project Management Body of Knowledge, (PMBOK® Guide) – Sixth Edition, Project Management Institute Inc., 2017, Page(s) 293

PMP Exam 4

Filtered Mode: Displaying 200 questions

Question 112 of 200
Question ID: 612488

A project manager is leading a project in which a vendor was engaged under a time and materials contract. During a procurement audit, it was discovered that the vendor had been using ghost employees to inflate the cost of the project artificially. As a result, the vendor was terminated for cause.

Which organizational process asset is updated to ensure the vendor will not be allowed to work on future projects?

AError! Not a valid embedded object. Procurement management plan

BError! Not a valid embedded object. Procurement file

CError! Not a valid embedded object. Lessons learned register

DError! Not a valid embedded object. Seller performance evaluation documentation

Question answered incorrectly

Hint:
Not all of the available options are organizational process assets.

Correct Answer: D

Explanation:

Of the available options, only the procurement file and the seller performance evaluation documentation are organizational process assets. Seller performance evaluation documentation is prepared by the buyer and documents the seller's ability to continue to perform work on the current contract, indicates whether the seller can be allowed to perform work on future projects, or rates how well the seller is performing the project work or has performed in the past. Additionally, if the vendor was listed as a preapproved seller, then the prequalified seller list should be updated to remove the vendor from being preapproved for future work, but the prequalified seller list was not listed as an answer choice. Therefore, of the choices provided, seller performance evaluation documentation is the best answer to the question asked.

Details for Each Option:

AError! Not a valid embedded object. Procurement management plan

Incorrect. The procurement management plan is not updated with performance issues of vendors. Additionally, the procurement management plan is a component of the project management plan and not an organizational process asset.

BError! Not a valid embedded object. Procurement file

Incorrect. The procurement file contains a complete set of indexed contract documentation. While the procurement file is an organizational process asset, it does not include information on seller performance, and, therefore, is not the best answer to the question asked.

CError! Not a valid embedded object. Lessons learned register

Incorrect. The lessons learned register might be updated with details on issues encountered during a procurement audit. However, the lessons learned register is a project document and not an organizational process asset.

DError! Not a valid embedded object. Seller performance evaluation documentation

Correct. Seller performance evaluation documentation is prepared by the buyer and documents the seller's ability to continue to perform work on the current contract, indicates whether the seller can be allowed to perform work on future projects, or rates how well the seller is performing the project work or has performed in the past. Also, the question implies that the Control Procurements process is carried out in the scenario, and seller performance evaluation documentation is one of the organizational process assets that may be updated during that process.

Reference:

A Guide to the Project Management Body of Knowledge, (PMBOK® Guide) – Sixth Edition, Project Management Institute Inc., 2017, Page(s) 501

PMP Exam 4

Filtered Mode: Displaying 200 questions

Question 113 of 200
Question ID: 613025

A project manager is performing the activities required to close the project. Although the stakeholders are pleased with the results of the project, there were quite a few missteps along the way, and the project manager and team learned a great deal. The project manager wants to ensure that the knowledge gained from this project can benefit future projects.

What should the project manager do first?

AError! Not a valid embedded object. Finalize the lessons learned register

BError! Not a valid embedded object. Meet with the project managers of future projects and share the knowledge

CError! Not a valid embedded object. Prepare the final project report

DError! Not a valid embedded object. Hand over the lessons learned register to the project management office

Question answered incorrectly

Hint:
All of the project documents are updated to their final versions during the Close Project or Phase process.

Correct Answer: A

Explanation:

The question suggests that the Close Project or Phase process is being performed. During the Close Project or Phase process, all of the project documents, including the lessons learned register, are updated to their final versions. The lessons learned register is a project document used to record knowledge gained during a project so that it can be used in the current project and entered into the lessons learned repository as part of the Close Project or Phase process. The lessons learned repository is an organizational process asset, which serves as a store of historical information about lessons learned from projects. The lessons learned register should first be finalized before the information is transferred to the lessons learned repository where it will be

available for use on future projects.

Details for Each Option:

AError! Not a valid embedded object. Finalize the lessons learned register

Correct. The lessons learned from the project should be finalized before being entered into the lessons learned repository.

BError! Not a valid embedded object. Meet with the project managers of future projects and share the knowledge

Incorrect. While a meeting can be a good idea, it is unrealistic to assume that one can meet with the project managers of all future projects. There is another, more efficient and formal way of ensuring that the knowledge gained from this project can benefit future projects.

CError! Not a valid embedded object. Prepare the final project report

Incorrect. The final project report is prepared as part of the Close Project or Phase process. However, the question is asking about how knowledge gained during the project is made available for use in future projects. The final project report provides a summary of project performance rather than knowledge gained during the project.

DError! Not a valid embedded object. Hand over the lessons learned register to the project management office

Incorrect. The project management office (PMO) is an organizational structure that standardizes the project-related governance processes and facilitates the sharing of resources, methodologies, tools, and techniques. Sharing the knowledge gained from one project to benefit future projects is not among the responsibilities of the PMO.

Reference:

A Guide to the Project Management Body of Knowledge, (PMBOK® Guide) – Sixth Edition, Project Management Institute Inc., 2017, Page(s) 124

PMP Exam 4

Filtered Mode: Displaying 200 questions

Question 114 of 200
Question ID: 613720

You are a project manager conducting a meeting with your newly hired project team. The primary purpose of the meeting is to assign roles and responsibilities to the team members. Since the team members are meeting for the first time, you have each of them introduce themselves and participate in a team-building exercise.

What stage in the Tuckman ladder model of team development does this scenario represent?

AError! Not a valid embedded object. Norming

BError! Not a valid embedded object. Forming

CError! Not a valid embedded object. Initiating

DError! Not a valid embedded object. Mourning

Question answered incorrectly

Hint:
What stage of the Tuckman ladder model of team development is represented by team members meeting for the first time?

Correct Answer: B

Explanation:

The question is referring to the Tuckman ladder of team development. The question describes a meeting where the team is meeting for the first time. The forming phase is where team members meet and learn about the project and their formal roles and responsibilities. The forming phase is the stage of team development that is described by the question.

Details for Each Option:

AError! Not a valid embedded object. Norming

Incorrect. In the norming phase, team members begin to work together and adjust their work habits and behaviors to support the team. The team members learn to trust each other. The question states that the team members are meeting for the first time, and therefore have yet to have the opportunity to adjust their work habits and behaviors.

BError! Not a valid embedded object. Forming

Correct. The forming phase is where team members meet and learn about the project and their formal roles and responsibilities. The forming phase is the stage of team development that is described by the question.

CError! Not a valid embedded object. Initiating

Incorrect. 'Initiating' is not one of the five stages identified in the Tuckman ladder model of team development.

DError! Not a valid embedded object. Mourning

Incorrect. The mourning phase is also referred to as the adjourning phase. In this phase, the team completes the work and moves on from the project. The question describes a team meeting for the first time rather than a team at the completion of a project.

Reference:

A Guide to the Project Management Body of Knowledge, (PMBOK® Guide) – Sixth Edition, Project Management Institute Inc., 2017, Page(s) 338

PMP Exam 4

Filtered Mode: Displaying 200 questions

Question 115 of 200
Question ID: 612720

A project manager has been chosen to lead the project to find a location for a second headquarters. The project manager wants to formalize the authority that has been assigned to her and to gain commitment and acceptance for the project.

What is the best thing for the project manager to do?

AError! Not a valid embedded object. Inform stakeholders of the approved project charter

BError! Not a valid embedded object. Obtain project charter approval from the sponsor

CError! Not a valid embedded object. Propose an implementation approach

DError! Not a valid embedded object. Meet with relevant stakeholders to determine the feasibility of the project

Question answered incorrectly

Hint:
What is the primary reason for a project charter?

Correct Answer: B

Explanation:

An approved project charter formally authorizes the existence of a project and provides the project manager with the authority to apply organizational resources to project activities. Therefore, if the project manager wants to formalize the authority assigned to her and gain commitment and acceptance for the project, the best thing for the project manager to do of the choices provided is to obtain approval for the project charter from the sponsor.

Details for Each Option:

AError! Not a valid embedded object. Inform stakeholders of the approved project charter

Incorrect. The scenario states that the project manager wants to formalize the authority that has been assigned to her implying that the authority has not yet been formalized, i.e., the project charter has not yet been approved. If the charter has not yet been approved, there is nothing to inform the stakeholders about.

BError! Not a valid embedded object. Obtain project charter approval from the sponsor

Correct. An approved project charter is a document that formally authorizes the existence of a project and provides the project manager with the authority to apply organizational resources to project activities. One of the benefits of an approved charter is that it shows the company's commitment and acceptance of the project. Therefore, obtaining project charter approval is the best way for the project manager to formalize the authority that has been given to her.

CError! Not a valid embedded object. Propose an implementation approach

Incorrect. An implementation approach based on high-level risks, assumptions, and constraints established on the current environment, organizational factors, and historical data may be proposed as part of the business case. The implementation approach will not formalize the project manager's authority on the project and therefore is not the best answer.

DError! Not a valid embedded object. Meet with relevant stakeholders to determine the feasibility of the project

Incorrect. According to the scenario, the project manager has been chosen as the project manager of the project. This suggests the feasibility of the project has already been decided, and the project has been justified.

Reference:

A Guide to the Project Management Body of Knowledge, (PMBOK® Guide) – Sixth Edition, Project Management Institute Inc., 2017, Page(s) 75; see also Project Management Professional (PMP)® Examination Content Outline, June 2015, Project Management Institute, Inc., Domain I, Task 6

PMP Exam 4

Filtered Mode: Displaying 200 questions

Question 116 of 200
Question ID: 613663

The project sponsor asks for an estimate of when the project will be complete. In response to this request, the project manager performs a calculation and determines that the project has an SPI of 1.1. Based on this information, the project manager creates an updated timeline and tells the sponsor that the project is estimated to be completed one week ahead of schedule.

What has the project manager provided to the project sponsor?

AError! Not a valid embedded object. Work performance information

BError! Not a valid embedded object. Schedule baseline

CError! Not a valid embedded object. Milestone schedule

DError! Not a valid embedded object. Schedule forecast

Question answered incorrectly

Hint:
What does an estimated or predicted completion date represent?

Correct Answer: D

Explanation:

The question suggests that the project manager is carrying out the Control Schedule process. Work performance information and schedule forecasts are two outputs of the Control Schedule process. The SPI of 1.1 provided in the question is an example of work performance information. Schedule forecasts are estimates or predictions of conditions and events in the project's future based on information and knowledge available at the time the schedule is calculated. A schedule forecast was made based upon the SPI of 1.1 and then provided to the project sponsor.

Details for Each Option:

AError! Not a valid embedded object. Work performance information

Incorrect. The SPI of 1.1 is an example of work performance information. However, the project manager provided the sponsor with a schedule forecast and not the work performance information.

BError! Not a valid embedded object. Schedule baseline

Incorrect. The schedule baseline is the approved version of the schedule, as opposed to the forecasted completion date provided by the project manager.

CError! Not a valid embedded object. Milestone schedule

Incorrect. A milestone schedule is a type of schedule that presents milestones with planned dates. The project manager gave the sponsor an estimated completion date and not the planned date.

DError! Not a valid embedded object. Schedule forecast

Correct. Schedule forecasts are estimates or predictions of conditions and events in the project's future based on information and knowledge available at the time the schedule is calculated. A schedule forecast was made based upon the SPI of 1.1 and provided to the project sponsor.

Reference:

A Guide to the Project Management Body of Knowledge, (PMBOK® Guide) – Sixth Edition, Project Management Institute Inc., 2017, Page(s) 228

PMP Exam 4

Filtered Mode: Displaying 200 questions

Question 117 of 200
Question ID: 613736

The project manager is 6 months into a multi-million-dollar project. The latest analysis shows a CPI of 1.5 and an SPI of 0.6.

What should she do?

AError! Not a valid embedded object. Nothing. The analysis shows the project is on budget and on schedule.

BError! Not a valid embedded object. Consider crashing the project

CError! Not a valid embedded object. Replace one of the higher paid team members with a lower-salaried employee

DError! Not a valid embedded object. Inform the customer that you are extending the delivery date for the project

Question answered incorrectly

Hint:
An SPI of 0.6 and a CPI of 1.5 mean the project is behind schedule and under budget.

Correct Answer: B

Explanation:

Earned value analysis is used in a project to compare planned versus actual schedule performance and planned versus actual cost performance to decide whether a corrective or preventive action is required. A CPI of 1.5 means that the project is getting $1.50 worth of work out of every $1.00 spent. Therefore, the project is under budget, and no corrective or preventive action is required. An SPI of 0.6 means that the project is only progressing at 60% of the rate originally planned. Therefore, the project is behind schedule, and corrective action is required. Since the project is under budget, there is funding to bring additional team members in or crash the project.

Details for Each Option:

AError! Not a valid embedded object. Nothing. The analysis shows the project is on budget and on schedule.

> *Incorrect. The analysis given in the scenario says the CPI is 1.5; meaning the project is getting $1.50 worth of work for every $1.00 spent or the project is under budget. The SPI mentioned in the scenario is 0.6, meaning the project is only progressing at 60% of the rate planned or the project is behind schedule. The project manager should look for options to correct the schedule. Therefore, doing nothing is not the right answer.*

BError! Not a valid embedded object. Consider crashing the project

> *Correct. Crashing the project is a technique used to shorten the project schedule by adding members to the team. With a CPI of 1.5, the project is under budget; therefore, adding additional team members is a viable option for bringing the project schedule back into alignment with the schedule baseline.*

CError! Not a valid embedded object. Replace one of the higher paid team members with a lower-salaried employee

> *Incorrect. The scenario describes a project that is under budget with a CPI of 1.5, and behind schedule with an SPI of 0.6. Replacing a higher paid team member with a lower salaried one would not improve the schedule, which is the problem. Therefore, this is an incorrect answer.*

DError! Not a valid embedded object. Inform the customer that you are extending the delivery date for the project

> *Incorrect. Earned value analysis is used in a project to compare planned versus actual schedule performance and decide whether a corrective or preventive action is required. The project manager cannot arbitrarily adjust the schedule baseline. Therefore, this is not a correct answer.*

Reference:

A Guide to the Project Management Body of Knowledge, (PMBOK® Guide) – Sixth Edition, Project Management Institute Inc., 2017, Page(s) 215, 228, 261-262

PMP Exam 4

Filtered Mode: Displaying 200 questions

Question 118 of 200
Question ID: 612136

Project communications have not been well received. While the technical stakeholders are satisfied with the content of the reports, the human resources stakeholders feel that the content is too technical and therefore do not read the reports.

What aspect of planning communications was missed during the development of the communications approach for the project?

AError! Not a valid embedded object. Sensitivity and confidentiality of the project information

BError! Not a valid embedded object. The method used to distribute project communications

CError! Not a valid embedded object. Which stakeholders wield power

DError! Not a valid embedded object. Awareness of cultural and personal differences

Question answered incorrectly

Hint:
The answer represents an interpersonal and team skill.

Correct Answer: D

Explanation:

Cultural awareness is an example of interpersonal and team skills that can be used among the tools and techniques during the Plan Communications Management process. Cultural awareness is an understanding of the differences between individuals or groups and adapting the project's communication strategy accordingly. Culture is often thought of as describing differences in nationality, ethnicity, or race. However, culture can also be used to describe differences in professional discipline. People from different professional disciplines may communicate using different languages, for example, members of technical departments may use more technical descriptions or words specific to their fields which will likely be too technical to the members of the human resource department. In the scenario, the communication issues seem to be related to the technical content. The project manager should have been more aware of the cultural

differences within the stakeholder community and adjusted the communications accordingly.

Details for Each Option:

AError! Not a valid embedded object. Sensitivity and confidentiality of the project information

Incorrect. The scenario suggests the problem with the project communications are related to content and not the confidentiality of the information.

BError! Not a valid embedded object. The method used to distribute project communications

Incorrect. In the scenario, the issue with the project communications appears to be related to the content of the communications and not the method used to distribute the reports.

CError! Not a valid embedded object. Which stakeholders wield power

Incorrect. Understanding which stakeholders wield power is part of political awareness. Using the interpersonal skill of political awareness helps the project manager plan communications based on the project environment as well as the organization's political environment. The question does not provide enough information to determine if any power relationships exist within the stakeholders' community. Therefore, it cannot be assumed that the political awareness aspect of communications planning was missed.

DError! Not a valid embedded object. Awareness of cultural and personal differences

Correct. Cultural awareness is an understanding of the differences between individuals or groups and adapting the project's communication strategy accordingly. People from different professional disciplines represent different cultures and therefore, may require a different type of communications. The project manager should have been more aware of the cultural differences within the stakeholder community and adjusted the communications accordingly.

Reference:

A Guide to the Project Management Body of Knowledge, (PMBOK® Guide) – Sixth Edition, Project Management Institute Inc., 2017, Page(s) 376, 373

PMP Exam 4

Filtered Mode: Displaying 200 questions

Question 119 of 200
Question ID: 612462

A project requires the use of various contractors to complete the project deliverables, and you have scheduled a bidder conference as part of the procurement process.

Which of the following values is best represented by holding a bidder conference?

AError! Not a valid embedded object. Responsibility

BError! Not a valid embedded object. Honesty

CError! Not a valid embedded object. Respect

DError! Not a valid embedded object. Fairness

Question answered incorrectly

Hint:
A bidder conference is used to ensure that all potential bidders have a clear and common understanding of the procurement and no bidders receive preferential treatment.

Correct Answer: D

Explanation:

A bidder conference is a meeting between the buyer and prospective sellers before proposal submittal. They are used to ensure that all potential bidders have a clear and common understanding of the procurement and no bidders receive preferential treatment. Of the available choices, providing equal access to information best exemplifies the value of fairness.

Details for Each Option:

AError! Not a valid embedded object. Responsibility

Incorrect. Responsibility is a duty to take ownership of the decisions one makes or fails to

make, the actions one takes or fails to take, and the consequences that result. A bidder conference does not directly promote taking ownership of actions or decisions.

BError! Not a valid embedded object. Honesty

Incorrect. Honesty is a duty to understand the truth and act truthfully both in communications and in conduct. A bidder conference provides equal access to information but is not directly related to honest communications or conduct.

CError! Not a valid embedded object. Respect

Incorrect. Respect is a duty to show high regard for the entrusted resources. These resources may include people, money, reputation, the safety of others, and natural or environmental resources. Although holding a bidder conference does convey respect to the prospective bidders, the primary purpose of a bidder conference is to provide a clear and common understanding and ensure that no bidders receive preferential treatment. Therefore, of the available options, respect is not the best answer to the question asked.

DError! Not a valid embedded object. Fairness

Correct. A bidder conference is used to ensure that all potential bidders have a clear and common understanding of the procurement and no bidders receive preferential treatment. Providing equal access to information is an example of the value of fairness.

Reference:

A Guide to the Project Management Body of Knowledge, (PMBOK® Guide) – Sixth Edition, Project Management Institute Inc., 2017, Page(s) 487; see also The PMI Code of Ethics and Professional Conduct, Fairness

---

PMP Exam 4

Filtered Mode: Displaying 200 questions

Question 120 of 200
Question ID: 612121

To promote continuous improvement, your organization uses a methodology that involves defining the objectives and scope of the project, measuring to obtain data, analyzing the collected data to find the root causes, improving by developing a solution, and controlling by evaluating the implemented solution.

What quality improvement method is your organization using?

AError! Not a valid embedded object. Total Quality Management (TQM)

BError! Not a valid embedded object. Six Sigma

CError! Not a valid embedded object. Quality function deployment (QFD)

DError! Not a valid embedded object. Deming's PDCA cycle

Question answered incorrectly

Hint:
One of the most common quality improvement tools used to analyze and evaluate opportunities for improvement.

Correct Answer: B

Explanation:

The Six Sigma method of quality improvement focuses on increasing the effectiveness and efficiencies of projects and eliminating defects and waste. The Six Sigma method is more comprehensive than prior process improvement initiatives such as Total Quality Management (TQM) and Continuous Quality Improvement (CQI). The scenario describes the steps in the methodology currently in place in your organization. Those steps are the phases of Six Sigma:

Define: The objectives and scope of the project are defined. Relevant information about the process and customer are collected.

Measure: Data on the current situation and process metrics are collected.

Analyze: Collected data are analyzed to find the root cause(s) of the problem.

Improve: Solution(s) to the problem are developed and implemented.

Control: The implemented solution(s) are evaluated, and mechanisms are implemented to hold the gains, which may include standardization.

Therefore, based on the description of these steps, the quality improvement method your organization uses is Six Sigma.

While the topic of this question is not included in the *PMBOK® Guide*, the Project Management Professional (PMP)® Examination Content Outline, June 2015, covers knowledge and skills, such as continuous improvement processes, with which PMP aspirants are expected to be familiar. Six Sigma is one of these topics.

Details for Each Option:

AError! Not a valid embedded object. Total Quality Management (TQM)

> *Incorrect. TQM describes a management approach to long-term success through customer satisfaction. In a TQM effort, all members of an organization participate in improving processes, products, services, and the culture in which they work. While TQM is concerned with quality, the scenario describes the five phases of Six Sigma, define, measure, analyze, improve, and control and, therefore, TQM is not the correct choice.*

BError! Not a valid embedded object. Six Sigma

> *Correct. Define, measure, analyze, improve, and control are the steps described in the scenario for the methodology used by your organization. These are the five phases of the Six Sigma quality improvement method.*

CError! Not a valid embedded object. Quality function deployment (QFD)

> *Incorrect. QFD is a structured method that uses seven management and planning tools, such as affinity diagrams, relations diagrams, tree diagrams, etc., to identify and prioritize customers' expectations quickly and effectively. The scenario describes the five phases of Six Sigma, define, measure, analyze, improve, and control, not the tools of QFD.*

DError! Not a valid embedded object. Deming's PDCA cycle

> *Incorrect. Deming's PDCA cycle is a four-step quality cycle consisting of plan, do, check, and act. The scenario describes the five phases of Six Sigma, define, measure, analyze,*

improve, and control.

Reference:

A Guide to the Project Management Body of Knowledge, (PMBOK® Guide) – Sixth Edition, Project Management Institute Inc., 2017, Page(s) 296, 275; see also https://www.pmi.org/learning/library/six-sigma-method-applications-pm-8515

PMP Exam 4

Filtered Mode: Displaying 200 questions

Question 121 of 200
Question ID: 612793

With a product development project underway, the project manager is facilitating a risk workshop and needs to determine the inputs for a Monte Carlo analysis. However, the costs associated with the development of a key feature are uncertain as the feature will require the use of new and previously untried technology.

What is the best course of action?

AError! Not a valid embedded object. Develop a cumulative probability distribution

BError! Not a valid embedded object. Review the lessons learned repository

CError! Not a valid embedded object. Utilize representations of uncertainty

DError! Not a valid embedded object. Run a simulation

Question answered incorrectly

Hint:
What tool or technique associated with the Perform Quantitative Risk Analysis process might be useful in determining inputs for a Monte Carlo simulation?

Correct Answer: C

Explanation:

As it pertains to risk management, a Monte Carlo simulation may be conducted during the Perform Quantitative Risk Analysis process. Of the tools and techniques associated with the Perform Quantitative Risk Analysis process, representations of uncertainty will be the most effective in addressing the issue described by the question. A Monte Carlo Simulation is an analysis technique where a computer model is iterated many times, with the input values chosen at random for each iteration driven by the input data, including probability distributions and probabilistic branches. With representations of uncertainty, the range of possible values associated with an activity can be represented as a probability distribution. In this scenario, the uncertain costs for developing the key feature can be represented by a probability distribution. These values can then serve as an input to the Monte Carlo simulation. Therefore, of the

available options, utilizing representations of uncertainty is the best answer to the question asked.

Details for Each Option:

AError! Not a valid embedded object. Develop a cumulative probability distribution

> *Incorrect. A cumulative probability distribution (S-curve) is an output from a Monte Carlo simulation, whereas the question is asking how to determine the inputs. A probability distribution may be an input for a Monte Carlo simulation, but not a 'cumulative' probability distribution.*

BError! Not a valid embedded object. Review the lessons learned repository

> *Incorrect. The question indicates that the source of uncertainty is related to the use of new and previously untried technology. As such, there is not likely to be any relevant information regarding this technology in the lessons learned repository.*

CError! Not a valid embedded object. Utilize representations of uncertainty

> *Correct. With representations of uncertainty, the range of possible values associated with an activity can be represented as a probability distribution. In this scenario, the uncertain costs for developing the key feature can be represented by a probability distribution. These values can then serve as an input to the Monte Carlo simulation.*

DError! Not a valid embedded object. Run a simulation

> *Incorrect. Simulations are typically performed using a Monte Carlo analysis. The question states that the project manager needs to determine the inputs in order to perform this analysis. Therefore, the project manager cannot run a simulation until the inputs are determined.*

Reference:

A Guide to the Project Management Body of Knowledge, (PMBOK® Guide) – Sixth Edition, Project Management Institute Inc., 2017, Page(s) 432

PMP Exam 4

Filtered Mode: Displaying 200 questions

Question 122 of 200
Question ID: 612607

A project manager has just received formal acceptance and final payment from a client for a software development project. The project manager needs to begin preparing the final project report.

Which of the following will be most useful in creating the final report?

AError! Not a valid embedded object. Stakeholder register

BError! Not a valid embedded object. Communications management plan

CError! Not a valid embedded object. Project charter

DError! Not a valid embedded object. Closing report register

Question answered incorrectly

Hint:
Where should you find high-level information about the project that would be useful in providing a summary of project performance?

Correct Answer: C

Explanation:

The final project report is created during the Close Project or Phase process. The final project report provides a summary of the project performance. The project charter is an input to the Close Project or Phase process. The project charter contains high-level information about the project, measurable project objectives and related success criteria, and other high-level project information which can be used to compare with actual project results to create the final project report. Of the available options, only the project charter has information that would be relevant in creating a summary of project performance, thus making the project charter the best answer to the question asked.

Details for Each Option:

AError! Not a valid embedded object. Stakeholder register

Incorrect. Stakeholder register is a project document which includes the identification, assessment, and classification of project stakeholders. The stakeholder register contains useful information for creating a distribution list for the final report. However, the stakeholder register does not have the type of high-level information that will be helpful in preparing the final report.

BError! Not a valid embedded object. Communications management plan

Incorrect. The communications management plan is a component of the project management plan that describes how, when, and by whom information about the project will be administered and disseminated. This information will be useful once the final report is complete to determine how the report should be communicated. However, the communications management plan does not contain information related to project performance.

CError! Not a valid embedded object. Project charter

Correct. The final project report provides a summary of the project performance. The project charter will contain high-level information about the project, measurable project objectives and related success criteria, and other high-level project information which can be used to create the final project report.

DError! Not a valid embedded object. Closing report register

Incorrect. 'Closing report register' is a fake term made up for this question.

Reference:

A Guide to the Project Management Body of Knowledge, (PMBOK® Guide) – Sixth Edition, Project Management Institute Inc., 2017, Page(s) 124, 127-128, 81

PMP Exam 4

Filtered Mode: Displaying 200 questions

Question 123 of 200
Question ID: 613787

During the vendor selection process, a start-up company has submitted a bid with a significantly lower price than the well-established vendor that you have always used in the past.

If you decide to award the contract to the start-up company, which project document is the most likely to be updated?

AError! Not a valid embedded object. Risk register

BError! Not a valid embedded object. Source selection criteria

CError! Not a valid embedded object. Prequalified seller list

DError! Not a valid embedded object. Procurement statement of work

Question answered incorrectly

Hint:
Which project document should be updated when an unproven vendor is selected for a project?

Correct Answer: A

Explanation:

The question indicates that a new vendor is being considered with whom the company has no prior experience. If this vendor is selected, an additional risk will be introduced into the project since the performance of the vendor has yet to be established. Each approved seller comes with its own unique set of risks. Changes are made to the risk register during the contracting process, which reflects the specific risks of each seller. Based on the risk of contracting with an unproven supplier, the risk register should be updated to account for this added risk. Of the available options, the risk register is the most likely project document to be updated if you decide to award the contract to the start-up company.

Details for Each Option:

AError! Not a valid embedded object. Risk register

Correct. Each approved seller comes with its own unique set of risks. Changes are made to the risk register during the contracting process, which reflects the specific risks of each seller.

BError! Not a valid embedded object. Source selection criteria

Incorrect. The source selection criteria describe how bidder proposals will be evaluated, including evaluation criteria and weights. The source selection criteria are determined before the bidding process and are not likely to change based on vendor selection.

CError! Not a valid embedded object. Prequalified seller list

Incorrect. Once the project is complete, the vendor, depending on their performance on the project, may or may not be added to the prequalified seller list. However, the prequalified seller list is an organizational process asset and not a project document as asked by the question.

DError! Not a valid embedded object. Procurement statement of work

Incorrect. The procurement statement of work provides sellers with a clearly stated set of goals, requirements, and outcomes from which they can provide a quantifiable response. The procurement statement of work is developed before the bidding process takes place and is unlikely to be updated when a vendor is selected.

Reference:

A Guide to the Project Management Body of Knowledge, (PMBOK® Guide) – Sixth Edition, Project Management Institute Inc., 2017, Page(s) 485

PMP Exam 4

Filtered Mode: Displaying 200 questions

Question 124 of 200
Question ID: 625083

A project manager has rejected a defective lot of A-frames. The contract with the vendor states that payment must be made upon delivery and does not explicitly contain a clause dictating whether payments should be released or held back in such instances. However, the project manager firmly believes that if she does not hold back the payment for the shipment of this particular lot, the vendor will not take timely corrective actions for further shipments.

What should the project manager do?

AError! Not a valid embedded object. Hold back the payment

BError! Not a valid embedded object. Release the payment

CError! Not a valid embedded object. Terminate the contract

DError! Not a valid embedded object. Release a partial payment

Question answered incorrectly

Hint:
According to the PMI Code of Ethics and Professional Conduct, what must Jill do in this scenario?

Correct Answer: B

Explanation:

The contract between the vendor and the project manager's company is a mutually binding agreement representing a legal relationship between them and obligating the vendor to provide the A-frames and the company to compensate the vendor for the deliverables. In the absence of a clause addressing the withholding of payments for the poor quality, the project manager has an ethical responsibility to release the payment to the vendor as provided by the contract. When errors or omissions are discovered either due to the project manager's fault or at the fault of someone else, the project manager must either accept the responsibility of their own mistakes or report the issue to the appropriate authority if the error resulted from someone else.

It would be wise to amend the contract to include a clause that allows payment to be held back in such instances and enact a penalty clause that requires the vendor to compensate the buyer for delays caused by the vendor. While it is rare that a contract is written without such a clause, this question is included to provide a situation that 'feels' like the buyer should have a right to withhold payment. However, procurement contracts must be honored as they are written, and the values outlined in the PMI Code of Ethics and Professional Conduct should be upheld.

Details for Each Option:

AError! Not a valid embedded object. Hold back the payment

> *Incorrect. The contract is a mutually binding agreement that obligates the vendor to provide the A-frames and the project manager's company to compensate the vendor. Since the contract does not contain any clauses addressing withholding of payment for poor quality, the project manager has an ethical and contractual responsibility to make the payment and find other ways to get the corrective actions on the A-frames.*

BError! Not a valid embedded object. Release the payment

> *Correct. The contract with the vendor is a mutually binding agreement that requires the vendor to provide the A-frames and the company to compensate the vendor. The contract does not account for poor quality, so the project manager has the responsibility to fulfill the terms and conditions of the agreement and release the payment.*

CError! Not a valid embedded object. Terminate the contract

> *Incorrect. The contract with the vendor obligates the company to compensate the vendor for the A-frames in light of the fact a clause addressing the poor quality does not exist. Terminating the contract is a premature action and could prevent the project manager from ever receiving the correct deliverables she needs. Therefore, terminating the contract is not the best answer.*

DError! Not a valid embedded object. Release a partial payment

> *Incorrect. The contract obligates the company to compensate the vendor for the delivered product. Without a clause addressing poor quality, releasing a partial payment has the same effect as withholding payment and is not an acceptable solution to this problem.*

Reference:

A Guide to the Project Management Body of Knowledge, (PMBOK® Guide) – Sixth Edition, Project Management Institute Inc., 2017, Page(s) 492-494, 489; see also PMI Code of Ethics and Professional Conduct, Responsibility

PMP Exam 4

Filtered Mode: Displaying 200 questions

Question 125 of 200
Question ID: 612610

You are the project manager for a consulting firm. After obtaining formal acceptance and receiving final payment, you are preparing the final project report. The report includes an assessment of whether the results achieved the benefits that the project was undertaken to address. You have already collected the performance results, and you now need to gain a better understanding of the intended project benefits.

What should you do next to accomplish this objective?

AError! Not a valid embedded object. Look at the agreements with the client

BError! Not a valid embedded object. Check the business documents

CError! Not a valid embedded object. Survey relevant project stakeholders

DError! Not a valid embedded object. Review the procurement management plan

Question answered incorrectly

Hint:
Where would you find the benefits management plan?

Correct Answer: B

Explanation:

The question implies that the Close Project or Phase process is underway. All of the answer choices may provide information that will be useful in this process. However, the question is specifically asking for a source of information for the intended project benefits. Business documents, such as the business case and the benefits management plan are among the inputs to the Close Project or Phase process. The benefits management plan outlines the target benefits of the project and perfectly addresses the need expressed in the question. Since the benefits management plan is not listed as an answer choice, the business documents become the best answer to the question asked.

One may argue that a seller should not have access to the business documents of the buyer. This

is typically true. And the question does not suggest otherwise. The thing is that both the buyer and the seller manage the engagement between them as a project. Therefore, both would have had created business documents. The benefits of the project for the buyer would be documented in the business documents of the buyer, and the benefits of the project for the seller would be documented in the business documents of the seller.

Details for Each Option:

AError! Not a valid embedded object. Look at the agreements with the client

Incorrect. Looking at the agreements with the client might provide some useful information on the intended benefits of the project. However, the question is taken from the perspective of the organization that was contracted to perform the project work. Therefore, looking at the agreements with the client is unlikely to provide 'your' organization with the information about the target benefits of 'your' project. There is another document which specifically documents the target benefits of the project which is a better answer to the question asked.

BError! Not a valid embedded object. Check the business documents

Correct. The business documents include the business case and the benefits management plan. The benefits management plan outlines the target benefits of the project, making this choice the best answer to the question asked.

CError! Not a valid embedded object. Survey relevant project stakeholders

Incorrect. The project stakeholders may have some information on the intended benefits of the project. However, the target benefits are documented in the benefits management plan during pre-project work. It is best to use the target benefits that were established at the start of the project. Stakeholder perceptions of what the project should have achieved can become distorted by personal biases and agendas. Additionally, this action is not the best use of time and available resources.

DError! Not a valid embedded object. Review the procurement management plan

Incorrect. The procurement management plan is a component of the project management plan that describes how a project team will acquire goods and services from outside of the performing organization. In this case, the question is taken from the perspective of the organization that was procured to perform the project work. It is not known from the question if some of the work was subcontracted out by the vendor. Regardless, even if there is a procurement management plan with some relevant information, there is another document which specifically captures the target benefits of the project which is a better answer choice.

Reference:

A Guide to the Project Management Body of Knowledge, (PMBOK® Guide) – Sixth Edition, Project Management Institute Inc., 2017, Page(s) 125, 127-128

PMP Exam 4

Filtered Mode: Displaying 200 questions

Question 126 of 200
Question ID: 612962

You are facilitating a meeting with key stakeholders to discuss a new project that will be conducted using an agile project management approach. One of the stakeholders is concerned about how the project fits in with the company's overall organizational strategy.

What would you recommend to the stakeholder to address their concern?

AError! Not a valid embedded object. Look at the benefits management plan

BError! Not a valid embedded object. Review the assumption log

CError! Not a valid embedded object. Examine the work breakdown structure

DError! Not a valid embedded object. Ask the project sponsor

Question answered incorrectly

Hint:
What project document describes the processes for creating, maximizing, and sustaining the benefits provided by a project?

Correct Answer: A

Explanation:

The project benefits management plan is the document that describes how and when the benefits of the project will be delivered. It also describes the mechanisms that should be in place to measure those benefits. For example, on projects conducted using an agile project management approach, the benefits could be realized as the project progresses. This is possible because on agile projects, the product is typically developed incrementally and is delivered with each consecutive iteration, thus providing value to the customer and a revenue stream (realized benefits) to the organization. A properly prepared benefits management plan describes the key elements of the benefits, including how well the project benefits align with the business strategies of the organization. Among the available choices, only the benefits management plan specifically addresses the concern raised by the stakeholder.

Details for Each Option:

AError! Not a valid embedded object. Look at the benefits management plan

Correct. A properly prepared benefits management plan describes the key elements of the benefits including how well the project benefits align with the business strategies of the organization.

BError! Not a valid embedded object. Review the assumption log

Incorrect. The assumption log is a project document used to record all assumptions and constraints throughout the project life cycle. The assumption log does not describe how the project fits in with the company's overall organizational strategy.

CError! Not a valid embedded object. Examine the work breakdown structure

Incorrect. The work breakdown structure (WBS) is a hierarchical decomposition of the total scope of work to be executed by the project. Since the project is still new, it may not yet have a WBS. Even if a WBS were to exist, it would not describe how the project fits in with the company's overall organizational strategy.

DError! Not a valid embedded object. Ask the project sponsor

Incorrect. The project sponsor is responsible for approving the project charter, securing funding for the project, and supporting the project manager with issues beyond the project manager's scope of authority. The project sponsor may have some information regarding the project's alignment with organizational strategy, but there is a readily available document which lists this information as a key element, which is a more appropriate source.

Reference:

A Guide to the Project Management Body of Knowledge, (PMBOK® Guide) – Sixth Edition, Project Management Institute Inc., 2017, Page(s) 33

PMP Exam 4

Filtered Mode: Displaying 200 questions

Question 127 of 200
Question ID: 612721

You have been working with the project initiator to develop a document that authorizes the existence of the project you are about to manage. You have just obtained approval of the document and want to ensure there is a common understanding by the stakeholders of the key deliverables, milestones, and the roles and responsibilities of everyone involved in the project.

What should you do next?

AError! Not a valid embedded object. Obtain project charter approval from the project sponsor

BError! Not a valid embedded object. Facilitate a focus group with the stakeholders

CError! Not a valid embedded object. Share the approved project charter with the stakeholders

DError! Not a valid embedded object. Share the approved project management plan with the stakeholders

Question answered incorrectly

Hint:
The project charter documents the high-level information on the project and on the product that the project is intended to produce.

Correct Answer: C

Explanation:

The document described in the scenario that you have been working on with the project initiator is the project charter. Chartering a project confirms the alignment of the project to the strategy and ongoing work of the organization. High-level information on the project is documented in the project charter. Therefore, if you want to ensure the stakeholders have a common understanding of the deliverables, milestones, and roles and responsibilities of everyone involved in the project, you should share the approved project charter with them.

Details for Each Option:

AError! Not a valid embedded object. Obtain project charter approval from the project sponsor

Incorrect. The document you have been working on with the project initiator is the project charter. You have already secured an approved charter, as described in the scenario, making this choice an incorrect answer.

BError! Not a valid embedded object. Facilitate a focus group with the stakeholders

Incorrect. The scenario implies you have been developing a project charter which then has been approved by the project sponsor. Focus groups are an example of the data gathering technique that can be used as a tool or technique during the Develop Project Charter process to bring stakeholders together to learn about the project in a conversational way. Since the project charter has already been approved, it can be assumed that the focus groups have already been facilitated.

CError! Not a valid embedded object. Share the approved project charter with the stakeholders

Correct. The project charter documents high-level information on the project such as key deliverables, summary milestone schedule, key stakeholder list, and project approval requirements. Therefore, sharing the approved project charter with the stakeholders will provide them with the information described in the scenario.

DError! Not a valid embedded object. Share the approved project management plan with the stakeholders

Incorrect. The project management plan describes how the project will be executed, monitored and controlled, and closed. While the project management plan will provide the stakeholders with the information described in the scenario, it likely has not been developed yet since you just received an approved charter.

Reference:

A Guide to the Project Management Body of Knowledge, (PMBOK® Guide) – Sixth Edition, Project Management Institute Inc., 2017, Page(s) 75, 81, 508

PMP Exam 4

Filtered Mode: Displaying 200 questions

Question 128 of 200
Question ID: 650109

You are leading a software development project using agile methodologies. If the project is successful, it will open up vast opportunities for future revenue and growth. The project has a high risk of failure, but the potential benefits outweigh the risks. These risks and rewards must be considered when selecting the content of each iteration.

Which features should be prioritized and developed first in this scenario?

AError! Not a valid embedded object. High-value and low-risk features

BError! Not a valid embedded object. Low-value and low-risk features

CError! Not a valid embedded object. High-value and high-risk features

DError! Not a valid embedded object. Low-value and high-risk features

Question answered incorrectly

Hint:
An important concept in agile is 'fast failure' which suggests that if a project is going to fail, it is better to fail early in the project life cycle when fewer resources have been expended.

Correct Answer: C

Explanation:

In agile projects, a backlog is a list of features, or requirements, to be developed. The features are first prioritized and then developed accordingly. When prioritizing a backlog, risks and value are typically the primary considerations (aside from legal or other requirements). The backlog must be prioritized and reprioritized throughout the project to determine what to include in each iteration. High-value features should be prioritized first as not all features are likely to be developed due to project constraints. Agile projects generate revenue by releasing product increments to the market with the high-value features first while lower priority features are still being developed.

Risks must also be considered when prioritizing the product backlog. High-risk features should

be prioritized over lower risk ones. When there is a risk of failure, as in this case, it is better to fail earlier in the project rather than later when more project resources have been expended. Additionally, the development of high-risk features is more likely to cause rework. Developing high-risk features earlier may reduce the amount of rework required.

It is important to remember that a feature's risk and value profile may change during the project life cycle and will require monitoring for possible reprioritization.

Therefore, of the available choices, the high-value and high-risk features should be prioritized and developed first in this scenario.

Details for Each Option:

AError! Not a valid embedded object. High-value and low-risk features

> *Incorrect. High-value and low-risk features should be prioritized after the high-value and high-risk features. Although these features might provide as much value as the high-value and high-risk features, they have less risk. High-risk features carry an inherent risk of failure for the project and it is more cost effective to fail early rather than later in the project.*

BError! Not a valid embedded object. Low-value and low-risk features

> *Incorrect. Low-value features are prioritized after all high-value features. With agile projects, it is likely that some features will not be developed given the project constraints. It is best to give these features a lower priority because of the greater likelihood that they will generate less revenue and, therefore, would not be included in the final product.*

CError! Not a valid embedded object. High-value and high-risk features

> *Correct. High-value and high-risk features should be developed first. These features deliver the most value to the project. Additionally, the high-risk features should be prioritized over low-risk features because, among other reasons, high-risk features are far more likely to cause the project to fail. If a project is going to fail, it is better to fail earlier in the project when fewer resources have been expended.*

DError! Not a valid embedded object. Low-value and high-risk features

> *Incorrect. Low-value and high-risk features should be avoided whenever possible. If there is little value in a feature, it does not make sense to assume a substantial risk in developing it.*

Reference:

A Guide to the Project Management Body of Knowledge, (PMBOK® Guide) – Sixth Edition, Project Management Institute Inc., 2017, Page(s) 400

PMI-ACP Exam Prep 2nd edition by Mike Griffiths and *Agile Estimating and Planning*, Mike Cohn, 2005, Risk Management.

PMP Exam 4

Filtered Mode: Displaying 200 questions

Question 129 of 200
Question ID: 612482

You recently received an email from a client, which states, "Thanks. We have received the goods you just shipped." You begin to close out the project, send the final invoice to the client, and release all of your staff. As you are preparing to leave for the day, you receive a voicemail from the client stating that the deliverables do not meet the required specifications. This information comes as a shock because you are sure the client has accepted the deliverables.

What should you do now?

AError! Not a valid embedded object. Call the client and tell them that they have accepted the deliverables and should now pay the final invoice

BError! Not a valid embedded object. Call the client to understand why they think the deliverables do not meet the required specifications

CError! Not a valid embedded object. Contact the legal department to check the contract and ask them to suggest a course of action

DError! Not a valid embedded object. Ignore the voicemail from the client since their email indicates that they have already accepted the deliverables

Question answered incorrectly

Hint:
What is required from the buyer before a procurement can be closed?

Correct Answer: B

Explanation:

Based on the scenario described, the client has not accepted the deliverables; they only acknowledged receipt of the goods. Your actions of beginning the closing process of the project are premature. Closed procurements are required to close the project. The procurement cannot be closed until the buyer, your client, provides the seller, you, with formal written notice that the contract has been completed. Therefore, since the client has not yet accepted the deliverables, you should contact the client to understand why they believe the deliverables do not meet the

terms and conditions of the agreement.

Details for Each Option:

AError! Not a valid embedded object. Call the client and tell them that they have accepted the deliverables and should now pay the final invoice

> *Incorrect. Your actions of starting the closing process of the project are premature. The email states that the goods were received but does not indicate that the client has accepted the deliverables. The verbiage contained in the email does not meet the criteria of formal written notice that the contract has been completed.*

BError! Not a valid embedded object. Call the client to understand why they think the deliverables do not meet the required specifications

> *Correct. Based on the scenario, the client has not accepted the deliverables; the client has only acknowledged receipt of the goods. The procurement should not be closed until your client provides you with formal written notice that the contract has been completed. At this point, all you have received is a notice of receipt of the deliverables. Therefore, you should contact the client to understand why they think the deliverables do not meet the terms and conditions of the agreement.*

CError! Not a valid embedded object. Contact the legal department to check the contract and ask them to suggest a course of action

> *Incorrect. Contacting the legal department is a premature action. First, you need to understand what aspect of the deliverables, according to your client, does not meet the terms and conditions as outlined in the contract.*

DError! Not a valid embedded object. Ignore the voicemail from the client since their email indicates that they have already accepted the deliverables

> *Incorrect. Your client never indicated that the deliverables met the contractual requirements. Your client only acknowledged that they received the goods. Ignoring the client is never a good idea.*

Reference:

A Guide to the Project Management Body of Knowledge, (PMBOK® Guide) – Sixth Edition, Project Management Institute Inc., 2017, Page(s) 499

PMP Exam 4

Filtered Mode: Displaying 200 questions

Question 130 of 200
Question ID: 612065

A project manager was asked to prepare a document, which the project sponsor will sign to authorize a new software development project.

Which of the following will the project manager want to include in this document?

AError! Not a valid embedded object.A work breakdown structure (WBS)

BError! Not a valid embedded object. The key project deliverables

CError! Not a valid embedded object.A project schedule

DError! Not a valid embedded object. The project budget

Question answered incorrectly

Hint:
The project manager has been asked to create the project charter.

Correct Answer: B

Explanation:

The question suggests that the project manager has been asked to develop the project charter. The project charter is a document issued by the project initiator or sponsor that formally authorizes the existence of a project and provides the project manager with the authority to apply organizational resources to project activities. The key deliverables for the project is an element, which should be included as a component of the project charter. The incorrect answer choices represent outputs of various processes of the Planning Process Group. The project charter is an output of the Develop Project Charter process, which is part of the Initiating Process Group. Therefore, of the available choices, the project manager should list the key project deliverables in the project charter.

Details for Each Option:

AError! Not a valid embedded object.A work breakdown structure (WBS)

Incorrect. The work breakdown structure (WBS) is a hierarchical decomposition of the total scope of work to be carried out by the project team to accomplish the project objectives and create the required deliverables. The WBS is created as an output of the Create WBS process, which occurs during project planning and not project initiation, as suggested by the question.

BError! Not a valid embedded object. The key project deliverables

Correct. The question suggests that the project manager has been asked to develop the project charter. The key deliverables for the project is an element, which should be included as a component of the project charter.

CError! Not a valid embedded object.A project schedule

Incorrect. A summary milestone schedule might be included in the project charter. However, the project schedule is not created until the Develop Schedule process is performed during project planning.

DError! Not a valid embedded object. The project budget

Incorrect. The project budget is the cost baseline plus the management reserve. The project budget is an output of the Determine Budget process, which is part of project planning. The question suggests that the project charter is being developed, which occurs during project initiation. Therefore, a project budget would not be available at this point in the project.

Reference:

A Guide to the Project Management Body of Knowledge, (PMBOK® Guide) – Sixth Edition, Project Management Institute Inc., 2017, Page(s) 81

PMP Exam 4

Filtered Mode: Displaying 200 questions

Question 131 of 200
Question ID: 625010

In preparation for creating the change management plan for the project, the project manager reviews the organizational process assets (OPAs).

Which of the following is the project manager least likely to use in this situation?

AError! Not a valid embedded object.A template for the project management plan

BError! Not a valid embedded object. Change control procedures

CError! Not a valid embedded object. Historical information from similar past projects

DError! Not a valid embedded object. The lessons learned register

Question answered incorrectly

Hint:
Which of the available responses does not represent an organizational process asset?

Correct Answer: D

Explanation:

The lessons learned register is a project document used to record knowledge gained during a project so that it can be used in the current project. The lessons learned register would only have information concerning the current project. The lessons learned register is not likely to have been created at this stage of the project, and, even if it did exist, it is unlikely to contain any pertinent information with the project still in the planning stage. The incorrect answer choices represent examples of the OPAs used as inputs to the Develop Project Management Plan process implied by the scenario where the change management plan is also developed. However, the question is asking to find an item that is 'least' likely to be used in this scenario. The lessons learned register is not an input to the Develop Project Management Plan process and, therefore, of the choices given, would provide the least value in this situation.

Details for Each Option:

AError! Not a valid embedded object.A template for the project management plan

Incorrect. The change management plan is a component of the project management plan. Therefore, a project management plan template should also contain a template for the change management plan.

BError! Not a valid embedded object. Change control procedures

Incorrect. Change control procedures include the steps by which official organizational standards, policies, plans, procedures, or any project documents will be modified and how any changes will be approved and validated

CError! Not a valid embedded object. Historical information from similar past projects

Incorrect. Historical information from similar past projects should be archived in the lessons learned repository. Understanding the effectiveness of the change management process from past projects may yield useful information that can be incorporated into the change management plan for the current project.

DError! Not a valid embedded object. The lessons learned register

Correct. The lessons learned register will only have information concerning the current project, and with the project still in the planning stage, will have little, if any, pertinent information.

Reference:

A Guide to the Project Management Body of Knowledge, (PMBOK® Guide) – Sixth Edition, Project Management Institute Inc., 2017, Page(s) 84, 88

PMP Exam 4

Filtered Mode: Displaying 200 questions

Question 132 of 200
Question ID: 614002

The following table contains information about the duration in days and predecessor activities on a project schedule.

What is the duration of the critical path?

Activity	Predecessor	Duration
Start	None	0
A	Start	4
B	A	3
C	B	1
D	Start	5
E	D	4
F	E	6
G	C,F	2
H	Start	4
I	H	2
Finish	G, I	0

AError! Not a valid embedded object.6 days

BError! Not a valid embedded object.10 days

CError! Not a valid embedded object.17 days

DError! Not a valid embedded object.31 days

Question answered incorrectly

Hint:
Use the critical path method (CPM) to determine all network paths through the schedule, then calculate the longest one.

Correct Answer: C

Explanation:

The critical path is the sequence of activities that represents the longest path on a project, which also represents the shortest possible duration of a project. The first step to correctly answer this question is to determine the critical path. This requires the creation of a project schedule network diagram, where you map the values from the activity list table provided by the question. Following is the network diagram for this question's scenario.

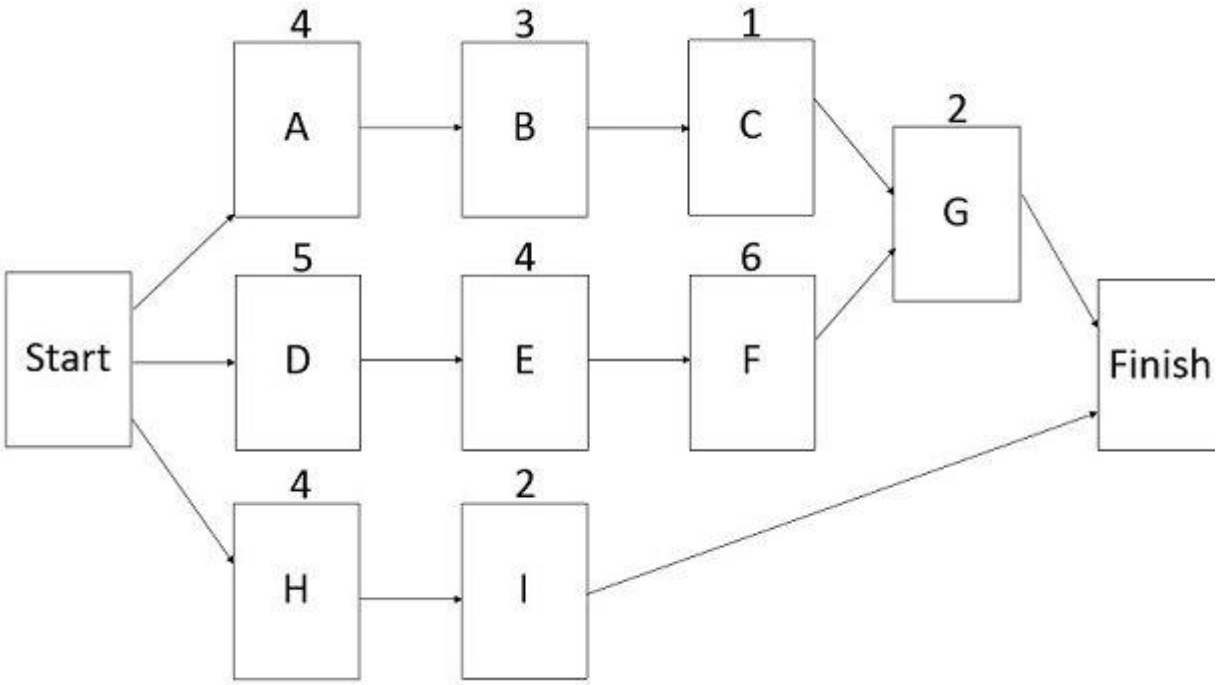

Once you have created the project schedule network diagram, you can determine the specific paths that exist for the activities on the project. This requires following each path that is mapped and calculating the length of each path based on the number of days for each activity in the path. Following are the paths for this scenario.

Path	Activities	Path Duration
Start-A-B-C-G-Finish	4+3+1+2	10
Start-D-E-F-G-Finish	5+4+6+2	17
Start-H-I-Finish	4+2	6

Now that you know each of the project schedule network paths and their respective lengths, determining the critical path is easy since you simply select the longest path. In this scenario, the critical path is Start-D-E-F-G-Finish, and it has a length of 17 days.

Details for Each Option:

AError! Not a valid embedded object.6 days

> *Incorrect. You might choose this if you chose the shortest path, Start-H-I-Finish. But the critical path is the longest in duration.*

BError! Not a valid embedded object.10 days

> *Incorrect. You might choose this if you chose the middle of the three paths, Start-A-B-C-G-Finish. But the critical path is the longest in duration.*

CError! Not a valid embedded object.17 days

> *Correct. The critical path is the longest in duration, and after identifying all possible paths, the longest path is Start-D-E-F-G-Finish, and its duration is 17 days.*

DError! Not a valid embedded object.31 days

> *Incorrect. You might get this answer if you added up all the durations for all activities. But you need to see all possible network paths through the sequence of activities, and that requires using the critical path method.*

Reference:

A Guide to the Project Management Body of Knowledge, (PMBOK® Guide) – Sixth Edition, Project Management Institute Inc., 2017, Page(s) 210-211; see also PMI® Practice Standard for Scheduling – Second Edition

---

PMP Exam Simulator

PMP Exam 4

Filtered Mode: Displaying 200 questions

Question 133 of 200
Question ID: 613629

In the fourth week of a 10-month project, a new project manager takes over and notices that earned value is consistently below planned value projections. The project manager is interested to know if the indirect costs were included in the cost estimates but not accounted for in the earned value assessment.

What project document would the project manager look at to determine how indirect costs are dealt with in the project budget?

AError! Not a valid embedded object. Basis of estimates

BError! Not a valid embedded object. Cost forecasts

CError! Not a valid embedded object. Cost baseline

DError! Not a valid embedded object. Project funding requirements

Question answered incorrectly

Hint:
What output of the Estimate Costs process shows proof of and describes the logic behind how the estimates are generated?

Correct Answer: A

Explanation:

Indirect costs are costs of doing business. They may benefit other projects as well, such as executive salaries, office utility expenses, etc. Indirect costs may or may not be included in the project budget. Each project is unique and, therefore, the decision to include/exclude indirect costs in/from the project budget is made at the project level as part of its Estimate Costs process. The decision is then documented in the basis of estimates document which is one of the outputs of that process. Indirect costs may be included on an activity level or for the project as a whole.

To understand if the project manager's hunch is correct, he would need to look at the basis of estimates to determine how indirect costs are handled across the project. Actual cost needs to correspond in definition to what was budgeted in the planned value and measured in earned value, for example, direct hours only, direct costs only, or all costs including indirect costs.

Details for Each Option:

AError! Not a valid embedded object. Basis of estimates

> *Correct. Supporting detail for cost estimates contained in the basis of estimates should specify any basic assumptions dealing with the inclusion or exclusion of indirect or other costs in the project budget.*

BError! Not a valid embedded object. Cost forecasts

> *Incorrect. Cost forecasts are monetary values that represent either a calculated estimate at completion (EAC) or a bottom-up EAC. Cost forecasts do not provide information on how indirect costs are dealt with in the project budget.*

CError! Not a valid embedded object. Cost baseline

> *Incorrect. The cost baseline is not a project document, but a component of the project management plan. Furthermore, it does not include the logic on how the cost estimates were determined.*

DError! Not a valid embedded object. Project funding requirements

> *Incorrect. Project funding requirements is not a project document. They are projected costs to be paid to fund the project. Usually, large companies schedule payments to fund projects over the course of the year. These payments are known as the project funding requirements. The project funding requirements do not have information on how indirect costs are handled.*

Reference:

A Guide to the Project Management Body of Knowledge, (PMBOK® Guide) – Sixth Edition, Project Management Institute Inc., 2017, Page(s) 250, 261, 246-247; see also https://www.projectmanagement.com/blog-post/6753/5-Types-of-Project-Cost

---

PMP Exam 4

Filtered Mode: Displaying 200 questions

Question 134 of 200
Question ID: 613711

Your current project has a 12-month timeline and a budget of $100,000. You are 6 months into the project, and you have spent $60,000, but only 40% of the work is complete. You do not anticipate that the cost performance will change and you estimate that the project will eventually spend $150,000 at its completion.

Which of these statements is true about your project?

AError! Not a valid embedded object. The estimate to complete this project is $150,000.

BError! Not a valid embedded object. There is not enough information given to evaluate the project.

CError! Not a valid embedded object. To complete the remaining work, your team needs to have a cost performance of 67%.

DError! Not a valid embedded object. The schedule efficiency of your team is 70% of the rate originally planned.

Question answered incorrectly

Hint:
Determining the cost performance that must be maintained in order to complete the current estimate at completion (EAC) is the TCPI.

Correct Answer: C

Explanation:

The total budget or BAC = $100,000. A budget for the project can be seen as its planned value (PV). The cost so far or AC is $60,000. You have completed 40% of the work which is the EV or 40% of $100,000 or $40,000. To find the correct answer, you will have to calculate the earned value analysis parameters provided in three out of the four answer choices. The correct answer is the calculation of the TCPI. Based on the scenario, "you estimate that the project will eventually spend $150,000 at its completion" implying the estimate at completion (EAC) is $150,000. Therefore, the calculations are as follows:

TCPI = (BAC - EV) / (EAC - AC) = (100,000 - 40,000) / (150,000 - 60,000) = 60,000 / 90,000 = 0.67 meaning your team needs to maintain a cost performance of 67% to complete the project with the current EAC.

Details for Each Option:

AError! Not a valid embedded object. The estimate to complete this project is $150,000.

> *Incorrect. This answer choice represents the estimate at completion (EAC), not the estimate to complete (ETC). The ETC is calculated as: ETC = EAC - AC = $150,000 - $60,000 = $90,000*

BError! Not a valid embedded object. There is not enough information given to evaluate the project.

> *Incorrect. The total budget or BAC = $100,000. The cost so far or AC is $60,000. You have completed 40% of the work which is the EV or 40% of $100,000 or $40,000. You are 6 months, or 50%, into a 12-month project with a $100,000 budget so the planned value, or PV, is 50% of $100,000 or $50,000. These values can be used to calculate any of the earned value analysis calculations.*

CError! Not a valid embedded object. To complete the remaining work, your team needs to have a cost performance of 67%.

> *Correct. The to-complete performance index, or the TCPI, is the estimate of the future cost performance that you need to complete the project within the approved budget. This budget may be your initial approved budget, BAC, or a newly calculated budget/estimate at completion, EAC. The TCPI is calculated using the formula: TCPI = (BAC - EV) / (EAC - AC) = 0.67 which means that to complete the remaining work, your team needs to have a cost performance of 67%.*

DError! Not a valid embedded object. The schedule efficiency of your team is 70% of the rate originally planned.

> *Incorrect. This answer suggests an SPI = 0.7. The SPI in this question is 0.8 using the following formula: SPI = EV / PV = 40,000 / 50,000 = 0.8*

Reference:

A Guide to the Project Management Body of Knowledge, (PMBOK® Guide) – Sixth Edition, Project Management Institute Inc., 2017, Page(s) 266-267

PMP Exam 4

Filtered Mode: Displaying 200 questions

Question 135 of 200
Question ID: 612436

You have just been hired to take over a software development project which is about halfway complete. On your first day, you attend the daily standup meeting where you learn that one of the developers has just quit without notice. You want to find out if this possibility was previously identified and, if so, who was assigned the responsibility of following up on this situation.

What is your best course of action?

AError! Not a valid embedded object. Review the issue log

BError! Not a valid embedded object. Check the risk register

CError! Not a valid embedded object. Look at the risk report

DError! Not a valid embedded object. Ask the project sponsor

Question answered incorrectly

Hint:
Which project document records the agreed-upon risk responses for each identified risk and the nominated owners for each response plan?

Correct Answer: B

Explanation:

The question indicates that a risk has been realized and it is unknown if the risk was previously identified, analyzed, and documented. The risk register records the agreed-upon risk responses for each identified risk and the nominated owners for each response plan. The risk register is created as an output of the Identify Risks process and can serve as an input to the Implement Risk Responses process, among others. Therefore, you should check the risk register to see if the risk described by the question had been previously documented along with a nominated risk owner.

Details for Each Option:

AError! Not a valid embedded object. Review the issue log

Incorrect. The issue log is a project document where information about issues is recorded and monitored. The problem described in the question should be captured in the issue log. However, issues are only recorded in the issue log once they have occurred. The question is asking if the possibility of losing a member of the development team was previously documented. The issue log documents actual issues rather than potential issues which may or may not occur.

BError! Not a valid embedded object. Check the risk register

Correct. The risk register records the agreed-upon risk responses for each identified risk and the nominated owners for each response plan.

CError! Not a valid embedded object. Look at the risk report

Incorrect. The risk report is a project document developed progressively throughout the project life cycle which summarizes information on individual project risks and the level of overall project risk. The risk of losing a member of the development may or may not have been captured in the risk report. However, the risk report does not identify risk owners associated with individual risks as asked by the question.

DError! Not a valid embedded object. Ask the project sponsor

Incorrect. The project sponsor may or may not be aware of identified project risks and associated risk owners. However, you, as the project manager, should seek to use the resources which are readily available to you before consulting with the project sponsor.

Reference:

A Guide to the Project Management Body of Knowledge, (PMBOK® Guide) – Sixth Edition, Project Management Institute Inc., 2017, Page(s) 450

PMP Exam 4

Filtered Mode: Displaying 200 questions

Question 136 of 200
Question ID: 612265

A project you are leading is approaching its end. One of the risk management subject matter experts assigned to the project calls you and recommends a change to the Implement Risk Responses process.

What should you do first?

AError! Not a valid embedded object. Call a meeting with all project stakeholders to gain their consensus on the change

BError! Not a valid embedded object. Instruct the team to implement the change as recommended by the subject matter expert

CError! Not a valid embedded object. Document the recommendation as a formal proposal to modify the requested process

DError! Not a valid embedded object. Tell the subject matter expert that changes are not accepted, as the project is approaching closure

Question answered incorrectly

Hint:
What should be done first when a change is requested?

Correct Answer: C

Explanation:

Whenever a change is requested, the first step to take is to write and submit a change request. A change request is a formal proposal to modify a document, deliverable, or baseline. The change recommended by the subject matter expert will impact the process, Implement Risk Responses, documented in the risk management plan, which is part of the project management plan. To modify the plan, a change request is required. Therefore, the first thing to do when a change is requested is to document the change as a formal proposal or, in other words, to submit a change request. Once the change request is submitted, the Perform Integrated Change Control process begins in which the change request is analyzed across all project constraints (scope, time, cost,

quality, risk, etc.). Later, a change control board or an authorized member of the project team will decide on whether to accept or reject the change request based on the results of the analysis.

Details for Each Option:

AError! Not a valid embedded object. Call a meeting with all project stakeholders to gain their consensus on the change

> *Incorrect. Having all project stakeholders agreed on a change sounds like an ideal situation. However, calling a meeting with all project stakeholders is unlikely to be a reasonable or realistic option. Even if the consensus can be reached, a submission of a formal change request should precede the gathering of such a meeting. Otherwise, on what basis would a project manager ask the stakeholders to spend time evaluating a request that is not even documented?*

BError! Not a valid embedded object. Instruct the team to implement the change as recommended by the subject matter expert

> *Incorrect. The Implement Risk Responses process is documented in the risk management plan, which is a component of the project management plan. To modify the plan, a change request is required.*

CError! Not a valid embedded object. Document the recommendation as a formal proposal to modify the requested process

> *Correct. Despite the fact that the project is closing soon, the first step in this scenario is to write and submit a change request, or, as phrased in this choice, to "document the recommendation as a formal proposal to modify..." which is the definition of a change request. The risk management plan, which is a component of the project management plan, describes, among the others, the process of how risk responses will be implemented on the project. Therefore, to modify the process, a change request should be submitted first, making this choice the best answer to the question asked.*

DError! Not a valid embedded object. Tell the subject matter expert that changes are not accepted, as the project is approaching closure

> *Incorrect. This is not the correct first step to take as it does not take the subject matter expert's suggestion into consideration. Regardless of when the project will be closing, change requests should be submitted and analyzed according to the change management plan. Simply telling the subject matter expert that the change cannot be reviewed may result in an important and potentially beneficial suggestion on risk management being missed or even cause a risk event to happen just days before project closure.*

Reference:

A Guide to the Project Management Body of Knowledge, (PMBOK® Guide) – Sixth Edition, Project Management Institute Inc., 2017, Page(s) 96, 87, 405

PMP Exam 4

Filtered Mode: Displaying 200 questions

Question 137 of 200
Question ID: 613785

You have been hired by the Department of Natural Resources to lead a project for the construction of new facilities at a local park. As the project manager, you are in the process of selecting the various vendors which will be required to complete the work.

In this situation, the use of what tool or technique is most likely to be legally mandated by the government agency?

AError! Not a valid embedded object. Agreements

BError! Not a valid embedded object. Requirements documentation

CError! Not a valid embedded object. Advertising

DError! Not a valid embedded object. Prequalified seller lists

Question answered incorrectly

Hint:
What tool or technique enhances transparency in awarding government contracts?

Correct Answer: C

Explanation:

Existing lists of potential sellers often can be expanded by placing advertisements in general circulation publications such as newspapers or specialty trade publications. Most government jurisdictions require public advertising or online posting of pending government contracts. Advertising is likely to be legally mandated, and it is the only tool or technique of the available answer choices.

Details for Each Option:

AError! Not a valid embedded object. Agreements

Incorrect. Contracts are likely to be required for a government project. However, agreements are an output of the Conduct Procurements process and not a tool or a technique.

BError! Not a valid embedded object. Requirements documentation

Incorrect. Requirements documentation is a description of how individual requirements meet the business need for the project. Requirements documentation is a project document rather than a tool or a technique.

CError! Not a valid embedded object. Advertising

Correct. Existing lists of potential sellers often can be expanded by placing advertisements in general circulation publications. Most government jurisdictions require public advertising or online posting of pending government contracts.

DError! Not a valid embedded object. Prequalified seller lists

Incorrect. Prequalified seller lists may be used during the Conduct Procurement process, but they are an organizational process asset and not a tool or technique as the question is asking.

Reference:

A Guide to the Project Management Body of Knowledge, (PMBOK® Guide) – Sixth Edition, Project Management Institute Inc., 2017, Page(s) 487

PMP Exam 4

Filtered Mode: Displaying 200 questions

Question 138 of 200
Question ID: 612380

During a project to develop a new robot, a previously identified risk is realized. The risk response plan calls for a project team member specially trained in robotics to address the problem, but the individual named in the response plan has left the project. You reassign another project team member with the required training to address the issue.

Which project document should be updated first?

AError! Not a valid embedded object. The quality management plan

BError! Not a valid embedded object. The risk response report

CError! Not a valid embedded object. The lessons learned repository

DError! Not a valid embedded object. The project team assignments

Question answered incorrectly

Hint:
Which of the available choices is a project document that may be updated as part of the Implement Risk Responses process?

Correct Answer: D

Explanation:

The question suggests that the Implement Risk Responses process is being performed. Project team assignments are one of the project documents that may be updated as a result of this process. In the scenario, a previously identified risk has been realized. The risk response requires the reassignment of a project team member to address the problem. Once the risk responses are confirmed, the necessary resources should be allocated to each action associated with the risk response plan. These resources include suitably qualified and experienced personnel to execute the agreed-upon action (usually within the project team), a specific budget and time allowance for the action, and any required technical resources to complete the action. Of the available choices, only the project team assignments should be updated as the result of implementing risk

responses.

Details for Each Option:

AError! Not a valid embedded object. The quality management plan

Incorrect. The quality management plan is a component of the project management plan that describes how applicable policies, procedures, and guidelines will be implemented to achieve the quality objectives set for the project. The fact the team member initially assigned to address the problem is unavailable does not change the contents of the quality management plan nor its objectives.

BError! Not a valid embedded object. The risk response report

Incorrect. 'Risk response report' is a fake term made up for this question

CError! Not a valid embedded object. The lessons learned repository

Incorrect. The lessons learned repository is a store of historical information about lessons learned from projects. The lessons learned repository is not updated until project closure began when the information contained in the lessons learned register is transferred to the lessons learned repository.

DError! Not a valid embedded object. The project team assignments

Correct. Resources associated with the implementation of the risk response plans should be allocated to each action specified in the risk register. As a result, the project team assignments document should be updated accordingly to reflect the changes in the team members' assignments, making this choice the best answer to the question asked.

Reference:

A Guide to the Project Management Body of Knowledge, (PMBOK® Guide) – Sixth Edition, Project Management Institute Inc., 2017, Page(s) 452

PMP Exam 4

Filtered Mode: Displaying 200 questions

Question 139 of 200
Question ID: 613727

Two project team members have had frequent clashes, which have at times resulted in shouting matches during team meetings. The project manager has intervened, asked them to resolve their differences, and even facilitated a meeting between them, but things have gotten worse. The project manager is concerned that the situation is negatively affecting team cohesion and is placing the successful completion of the project at risk.

What should the project manager do next?

AError! Not a valid embedded object. Use formal procedures including disciplinary actions

BError! Not a valid embedded object. Allow the team members to resolve their differences on their own

CError! Not a valid embedded object. Facilitate another meeting between the two team members

DError! Not a valid embedded object. Request that the other project team members intercede as a form of peer pressure

Question answered incorrectly

Hint:
What is the proper escalation path in this scenario?

Correct Answer: A

Explanation:

Project team members are initially responsible for resolving their own conflicts. If the conflict escalates, the project manager should help facilitate a satisfactory resolution. If the disruptive conflict persists, formal procedures may be used, including disciplinary action. In this scenario, the project manager has already given the team members the opportunity to resolve their own issues and attempted to facilitate a resolution. The project manager should not allow conflict to put the success of the project at risk. The project manager should use formal procedures including disciplinary actions to resolve the issue.

Details for Each Option:

AError! Not a valid embedded object. Use formal procedures including disciplinary actions

> *Correct. Formal procedures may be used including disciplinary actions in order to prevent the project from being put at risk.*

BError! Not a valid embedded object. Allow the team members to resolve their differences on their own

> *Incorrect. The first step is to allow the team members to resolve the conflict on their own. However, that has failed to resolve the issue, and the project is at risk.*

CError! Not a valid embedded object. Facilitate another meeting between the two team members

> *Incorrect. The second step is for the project manager to facilitate a resolution between the parties. However, that has failed to resolve the issue, and the project is at risk.*

DError! Not a valid embedded object. Request that the other project team members intercede as a form of peer pressure

> *Incorrect. Conflict should be addressed privately and confidentially. It is inappropriate to involve the other team members in conflict resolution.*

Reference:

A Guide to the Project Management Body of Knowledge, (PMBOK® Guide) – Sixth Edition, Project Management Institute Inc., 2017, Page(s) 348

PMP Exam 4

Filtered Mode: Displaying 200 questions

Question 140 of 200
Question ID: 612508

During a procurement audit, it is discovered that a vendor's project team is spending an inordinate amount of time using a group review technique which was not stipulated in the contract, thus causing a delay to the project. A corrective action has been taken to address the issue.

What should the project manager document in the lessons learned register regarding the vendor?

AError! Not a valid embedded object.A record indicating that the vendor should not be considered for future projects

BError! Not a valid embedded object. Recommendation to include the vendor for future projects

CError! Not a valid embedded object. Effectiveness of corrective actions used to improve vendor's performance

DError! Not a valid embedded object. Procurement information is not captured in lessons learned register

Question answered incorrectly

Hint:
What type of procurement information may be useful for the current project or future projects?

Correct Answer: C

Explanation:

A procurement audit is a structured review of the procurement process, and the lessons learned register is updated with relevant information on procurements. For example, when variance occurs, and the corrective action is taken to address variance, the lessons learned register should be updated with the description of the situation and the actions taken to address it along with the indication on how effective those actions were. At the end of the project, the lessons learned are transferred to the lessons learned repository to serve future projects in improving their procurement efforts. Of the available answer choices, only the effectiveness of corrective actions

would be recorded in the lessons learned register.

Details for Each Option:

AError! Not a valid embedded object.A record indicating that the vendor should not be considered for future projects

> *Incorrect. Based on poor performance, the vendor may be removed from consideration for future projects. However, removing the vendor from consideration for future work requires an update to the prequalified seller lists and the seller performance evaluation documentation rather than the lessons learned register.*

BError! Not a valid embedded object. Recommendation to include the vendor for future projects

> *Incorrect. The vendor ran behind schedule by performing work not specified in the contract. Based on the limited information presented in the scenario, it is unlikely that the vendor would be recommended for use on future projects. While the recommendation not to include the vendor for future projects could be documented in the lessons learned register, the right place for such a recommendation is the seller performance evaluation documentation.*

CError! Not a valid embedded object. Effectiveness of corrective actions used to improve vendor's performance

> *Correct. A procurement audit is a structured review of the procurement process. The lessons learned register is updated with relevant information on procurements. Where variances occurred, the register should show the corrective actions that were used to respond to variances and how effective those actions were. The project manager works with the vendor to address the variance. Any corrective actions that resulted from this interaction, as well as the effectiveness of the actions, should be documented in the lessons learned register.*

DError! Not a valid embedded object. Procurement information is not captured in lessons learned register

> *Incorrect. Any pertinent information regarding procurements which may be useful later in the current project, or on future projects, is documented in the lessons learned register. If there have been any claims, information should be documented to avoid recurrences. Additional information on how to improve the procurement process can also be recorded in the lessons learned register.*

Reference:

A Guide to the Project Management Body of Knowledge, (PMBOK® Guide) – Sixth Edition, Project Management Institute Inc., 2017, Page(s) 498, 500

PMP Exam 4

Filtered Mode: Displaying 200 questions

Question 141 of 200
Question ID: 613691

A project is in planning. The project has many unknown components making it hard to decompose and schedule adequately. You are a senior project manager, and in a project like this, you would typically plan the schedule to a higher level first and wait until the project has begun to plan the lower levels. However, this project has been assigned to a junior project manager. She is in the process to develop the schedule management plan and approaches you for advice on how to better accomplish this task.

By looking for your advice, what tool is the junior project manager using to plan her project?

AError! Not a valid embedded object. Rolling wave planning

BError! Not a valid embedded object. Expert judgment

CError! Not a valid embedded object. On-demand scheduling

DError! Not a valid embedded object. Iterative scheduling

Question answered incorrectly

Hint:
What tools and techniques are used in the Plan Schedule Management process?

Correct Answer: B

Explanation:

It can be implied that the junior project manager is performing the Plan Schedule Management process which will result in the schedule management plan. The scenario also describes rolling wave planning as one of the tools that you, as a senior project manager, typically use on projects with many unknowns. However, this question is not asking for a scheduling methodology. The junior project manager has approached you, a senior project manager, for help in planning her project. In other words, she is looking for your expertise or expert judgment. This question is an example of a scenario that has some extraneous information which may purposefully or not mislead prospective PMP aspirants. Always read the full question.

Details for Each Option:

AError! Not a valid embedded object. Rolling wave planning

Incorrect. Rolling wave planning is a scheduling technique where the schedule in the near term is planned in detail, while the schedule in the future is planned to a higher level first and then detailed as the project progresses. However, this question is not asking for a scheduling technique. The junior project manager has approached you, a senior project manager, for help in planning her project.

BError! Not a valid embedded object. Expert judgment

Correct. Expert judgment is one of the tools and techniques that can be used as part of the Plan Schedule Management process described in the scenario. The junior project manager asking for advice from the senior project manager is an example of expert judgment.

CError! Not a valid embedded object. On-demand scheduling

Incorrect. On-demand scheduling is an approach which is typically used on projects where the workflow is managed in a Kanban system. There is not enough information in the scenario to determine if Kanban system is used on the project. Additionally, the essence of the question surrounds the way the junior project manager approaches schedule planning rather than a specific scheduling methodology.

DError! Not a valid embedded object. Iterative scheduling

Incorrect. Iterative scheduling is a form of rolling wave planning based on adaptive project life cycles. However, the question is not asking for a scheduling method. The question asks for the tool used by the junior project manager when she approaches the senior project manager.

Reference:

A Guide to the Project Management Body of Knowledge, (PMBOK® Guide) – Sixth Edition, Project Management Institute Inc., 2017, Page(s) 181, 177

PMP Exam 4

Filtered Mode: Displaying 200 questions

Question 142 of 200
Question ID: 612460

A project team is comprised of former military and non-military team members. The team members without a military background view the former military team members as overly structured and rigid in their approach to the project. The former military members view the other team members' more casual approach as an indication that they are less committed to the project.

What tool or technique will be the most useful for the project manager and the team members to communicate effectively?

AError! Not a valid embedded object. Political awareness

BError! Not a valid embedded object. Team charter

CError! Not a valid embedded object. Conflict management

DError! Not a valid embedded object. Cultural awareness

Question answered incorrectly

Hint:
What tool or technique is most helpful when dealing with groups or individuals with different backgrounds and values?

Correct Answer: D

Explanation:

The question describes a project team made of two distinct groups of individuals (military and non-military). It is apparent from the description in the question that these groups have different backgrounds and values. Cultural awareness is used to help the project manager and team to communicate effectively by considering cultural differences and the requirements of stakeholders. Of the available choices, understanding these cultural differences will be most valuable to the project manager and the team in fostering effective communication.

Details for Each Option:

AError! Not a valid embedded object. Political awareness

Incorrect. Political awareness is achieved through understanding the power relationships within and around the project. The question describes two groups within the project team with different backgrounds. There is no indication from the question that there is a difference in the power and influence of one group over the other. Therefore, power relationships are unlikely to be a factor in this scenario.

BError! Not a valid embedded object. Team charter

Incorrect. The team charter is a project document that establishes the team values, agreements, and operating guidelines for the team. As such, the team charter can be helpful in the scenario described. However, the team charter is a project document and not a tool or technique and is, therefore, not the best answer to the question asked.

CError! Not a valid embedded object. Conflict management

Incorrect. Cultural differences may or may not lead to conflict. The question describes two distinct groups of individuals with different backgrounds and values. However, the question does not indicate whether or not there is an actual conflict between these two groups. Therefore, conflict management is not the most useful tool or technique in the scenario described.

DError! Not a valid embedded object. Cultural awareness

Correct. Cultural awareness is an example of the interpersonal and team skill that can be used as a tool or technique in various project management processes. Cultural awareness is used to help the project manager and team to communicate effectively by considering cultural differences and the requirements of stakeholders.

Reference:

A Guide to the Project Management Body of Knowledge, (PMBOK® Guide) – Sixth Edition, Project Management Institute Inc., 2017, Page(s) 376, 386, 527, 534, 552

PMP Exam 4

Filtered Mode: Displaying 200 questions

Question 143 of 200
Question ID: 650503

A project team member provides the project manager with duration estimates for one of her tasks. The team member specifies a pessimistic estimate of 75 days, an optimistic estimate of 30 days, and a most likely estimate of 60 days. The project manager requests that the team member provide a single estimate by using a beta distribution formula.

What estimate should the team member provide?

AError! Not a valid embedded object.55 days

BError! Not a valid embedded object.60 days

CError! Not a valid embedded object.47.5 days

DError! Not a valid embedded object.57.5 days

Question answered incorrectly

Hint:
This question requires you to have memorized the beta distribution formula.

Correct Answer: D

Explanation:

The scenario involves the project manager asking that a team member to use a beta distribution to provide a single value estimate for the duration of the task.

Therefore, to answer the question correctly, one should use the appropriate formula:

D= (O + 4*M + P) / 6 = (30 + 4*60 + 75) / 6 = 345 / 6 = 57.5 days

Details for Each Option:

AError! Not a valid embedded object.55 days

Incorrect. You may have chosen this answer if you used the simple triangular distribution formula, where D = (O + M + P) / 3 = (30 + 60 + 75) / 3 = 165 / 3 = 55. However, the beta distribution formula is required.

BError! Not a valid embedded object.60 days

Incorrect. This answer choice represents the most likely estimate. The question is asking about the estimate calculated using the beta distribution formula.

CError! Not a valid embedded object.47.5 days

*Incorrect. You may have chosen this answer if you incorrectly used the formula: D = (O +3M + P) / 6 = (30 + 3*60 + 75) / 6 = 47.5. In other words, you multiplied the most likely estimate 60 by 3 instead of 4.*

DError! Not a valid embedded object.57.5 days

*Correct. This answer choice represents cost estimate correctly calculated using weighted beta distribution formula as required by the question: D = (O + 4M + P) / 6 = (30 + 4*60 + 75) / 6 = 345 / 6 = 57.5 days.*

Reference:

A Guide to the Project Management Body of Knowledge, (PMBOK® Guide) – Sixth Edition, Project Management Institute Inc., 2017, Page(s) 201, 245; see also the *PMI Practice Standard for Scheduling*.

Live Feedback™ Back to Results

Prev Next

PMP Exam 4

Filtered Mode: Displaying 200 questions

Question 144 of 200
Question ID: 613671

A project manager is planning a project to construct a new multiplex movie theater. As she starts the process of estimating the costs associated with the project, she is unsure whether to use an analogous or bottom-up approach. The company has built similar movie theaters in the past, but senior management has a preference for the highest level of detail.

What is the best resource to determine the estimating method that should be used for the project?

AError! Not a valid embedded object. Basis of estimates

BError! Not a valid embedded object. Resource management plan

CError! Not a valid embedded object. Cost management plan

DError! Not a valid embedded object. Scope baseline

Question answered incorrectly

Hint:
Which component of the project management plan describes estimating methods that can be used during the Estimate Costs process?

Correct Answer: C

Explanation:

It can be inferred from the question that the Estimate Costs process is being performed. The cost management plan is the component of the project management plan that describes how costs will be planned including the estimating methods that can be used. The cost management plan is the best resource for the project manager to determine how the Estimate Costs process should be performed.

Details for Each Option:

AError! Not a valid embedded object. Basis of estimates

Incorrect. The basis of estimates provides supporting documentation for cost estimates but does not provide guidance on estimating methods. Additionally, the basis of estimates is an output from, not an input to, the Estimate Costs process.

BError! Not a valid embedded object. Resource management plan

Incorrect. The resource management plan describes how project resources are acquired, allocated, monitored, and controlled, but it does not provide guidance on how costs are to be estimated.

CError! Not a valid embedded object. Cost management plan

Correct. The cost management plan is the component of the project management plan that describes how costs will be planned, structured, and controlled. The cost management plan is the document that describes the estimating methods that can be used during the Estimate Costs process, which is what the question asks.

DError! Not a valid embedded object. Scope baseline

Incorrect. The scope baseline is the approved version of a scope statement, work breakdown structure (WBS), and its associated WBS dictionary. The scope baseline is not a resource for cost estimating methods.

Reference:

A Guide to the Project Management Body of Knowledge, (PMBOK® Guide) – Sixth Edition, Project Management Institute Inc., 2017, Page(s) 241

PMP Exam 4

Filtered Mode: Displaying 200 questions

Question 145 of 200
Question ID: 613786

A project manager evaluates sellers' proposals for the deliverables the company wants to outsource and selects sellers who are in a competitive range for the work required. Since the company considers this work to be complex and bear high value and risk, the project manager submits these sellers to senior management for approval before awarding the contract.

Which of the following would be the most likely result of the project manager's efforts?

AError! Not a valid embedded object. Prescribed sellers

BError! Not a valid embedded object. Advertising

CError! Not a valid embedded object. Prequalified sellers

DError! Not a valid embedded object. Agreements

Question answered incorrectly

Hint:
The sellers have been selected. Once the approval is gained for a specific seller(s), what happens next?

Correct Answer: D

Explanation:

The scenario suggests the project manager is carrying out the Conduct Procurements process. Among the others, selected sellers and agreements (contracts) are outputs from this process. The selected sellers are those who have been judged to be in a competitive range based on the outcome of the proposal or bid evaluation. A contract is a mutually binding agreement that obligates the seller to provide the specified products, services, or results; obligates the buyer to compensate the seller; and represents a legal relationship that is subject to remedy in the courts. However, for complex, high-value, high-risk procurements as the one described in the scenario, before an agreement (contract) can be awarded to a seller, final approval of the organizational senior management will typically be required. Once this approval is gained, a contract (agreement) can be awarded. Therefore, of the choices provided, agreements would be the most

likely result of the project manager's efforts in the scenario described.

Note, one may argue that if no approval is gained from the senior management, no agreements/contracts will be awarded. While this scenario is possible, none of the answer choices addresses this option. Therefore, an assumption has to be made that approval is gained resulting in a contract and thus making "agreements" the best answer to the question asked.

Details for Each Option:

AError! Not a valid embedded object. Prescribed sellers

Incorrect. 'Prescribed sellers' is a fake term made up for this question.

BError! Not a valid embedded object. Advertising

Incorrect. Advertising is communicating with users or potential users of a product, service, or result. Advertising is one of the tools and techniques that can be used as part of the Conduct Procurements process suggested by the scenario. However, according to the scenario, sellers' responses have already been received, implying advertising has already taken place earlier in the project.

CError! Not a valid embedded object. Prequalified sellers

Incorrect. Prequalified sellers are specified in the prequalified seller lists. A prequalified seller list is a list of sellers which have been pre-approved by the procuring organization. The question does not specify whether or not a prequalified seller list has been used. Additionally, prequalified seller lists are more likely to be used to solicit proposals, while the question is asking about the result of the proposal evaluations.

DError! Not a valid embedded object. Agreements

Correct. Agreements define the initial intentions of a project and can take the form of a contract, memorandum of understanding (MOU), letters of agreement, verbal agreements, email, etc. According to the scenario, the sellers have been selected. Therefore, once approval is provided by the senior management, an agreement (contract) will likely be awarded.

Reference:

A Guide to the Project Management Body of Knowledge, (PMBOK® Guide) – Sixth Edition, Project Management Institute Inc., 2017, Page(s) 488-489

PMP Exam 4

Filtered Mode: Displaying 200 questions

Question 146 of 200
Question ID: 612357

A construction project has experienced weather-related delays as well as performance issues with several key vendors, and the risk responses have been implemented with varying degrees of success. A senior executive has asked the project manager for an update on the current overall project risk exposure.

What should the project manager do?

AError! Not a valid embedded object. Provide the senior executive a copy of the updated risk register

BError! Not a valid embedded object. Make sure the risk report is updated and provide it to the senior executive

CError! Not a valid embedded object. Refer the senior executive to the risk management plan

DError! Not a valid embedded object. Send an updated copy of the risk exposure report to the senior executive

Question answered incorrectly

Hint:
What may be updated with information on overall project risks as the result of the Implement Risk Responses process?

Correct Answer: B

Explanation:

The question suggests that the Implement Risk Responses process has been performed multiple times to address high-level project risks that were realized throughout project execution. The risk report is typically updated to reflect any changes to the previously agreed-upon risk responses to overall project risk exposure that are subsequently made as a result of the Implement Risk Responses process. Of the available choices, only the risk report provides information on overall project risks. Therefore, to address the senior executive's request, the project manager should make sure the risk report is updated with the latest information and provide the report to the

senior executive.

Details for Each Option:

AError! Not a valid embedded object. Provide the senior executive a copy of the updated risk register

> *Incorrect. The risk register may be updated to reflect any changes to the previously agreed-upon risk responses for 'individual' project risks that are subsequently made as a result of the Implement Risk Responses process. However, the question is asking about overall project risks and not individual project risks. Overall project risks are not recorded in the risk register. Additionally, senior executives are typically looking for summary information (which is available in a risk report) rather than details (which are available in the risk register).*

BError! Not a valid embedded object. Make sure the risk report is updated and provide it to the senior executive

> *Correct. The risk report may be updated to reflect any changes to the previously agreed-upon risk responses to overall project risk exposure that are subsequently made as a result of the Implement Risk Responses process. Therefore, the project manager should update the risk report and provide a copy to the senior executive.*

CError! Not a valid embedded object. Refer the senior executive to the risk management plan

> *Incorrect. The risk management plan is a component of the project management plan that describes how risk management activities will be structured and performed. However, the risk management plan does not provide insight into overall project risk exposure.*

DError! Not a valid embedded object. Send an updated copy of the risk exposure report to the senior executive

> *Incorrect. 'Risk exposure report' is a fake term made up for this question.*

Reference:

A Guide to the Project Management Body of Knowledge, (PMBOK® Guide) – Sixth Edition, Project Management Institute Inc., 2017, Page(s) 418, 452

PMP Exam 4

Filtered Mode: Displaying 200 questions

Question 147 of 200
Question ID: 612538

Once a quarter, a project manager invites managers from various departments to the project team meetings. Although these managers are not involved in the project, the project manager invites them because this is what she was doing in her previous organization. However, when any of these managers attend the meetings, their questions cause the meeting to run late.

What should have been done differently?

AError! Not a valid embedded object. Starting the meeting by stating the objectives

BError! Not a valid embedded object. Following up the meeting with minutes

CError! Not a valid embedded object. Preparing and distributing an agenda

DError! Not a valid embedded object. Inviting the appropriate participants

Question answered incorrectly

Hint:
Which step for effective meeting planning is not being followed in the scenario?

Correct Answer: D

Explanation:

The scenario implies that the Manage Communications process is being carried out. Meeting management is among the interpersonal and team skills that can be used as a tool or technique during this process. Effective meeting management involves taking steps to ensure meetings achieve their intended objectives effectively and efficiently. All of the answer choices are steps that should be used for meeting planning. However, the scenario mentions one step that the project manager is not following: ensuring appropriate participants are invited. The managers from the various departments are not involved in the current project and therefore are not considered appropriate participants. Just because inviting irrelevant to the project managers was a practice in one organization does not mean this practice will work or should be implemented in another organization or even in a different project in the same organization. The matter of fact is that in the current organization in the current project the meetings only run long when the

irrelevant managers attend. Therefore, the best course of action to prevent the meetings from running late is not to invite those managers going forward.

Details for Each Option:

AError! Not a valid embedded object. Starting the meeting by stating the objectives

> *Incorrect. While starting a meeting by stating the objectives is always a good practice for managing a meeting, the scenario doesn't provide any details on how the project manager leads meetings. Additionally, starting the meeting by stating the meeting objectives would not prevent the managers from asking questions, which is the reason the meetings run late.*

BError! Not a valid embedded object. Following up the meeting with minutes

> *Incorrect. Following-up a meeting with minutes is good practice. However, minutes will have no impact on the length of the meeting.*

CError! Not a valid embedded object. Preparing and distributing an agenda

> *Incorrect. Preparing and distributing an agenda for meetings is an essential step in meeting management. The scenario does not supply enough information about how the meetings are managed except that the meetings run long whenever the managers from the various departments attend. However, even an effective agenda by itself would not prevent the managers from asking questions, which is the reason the meetings run late.*

DError! Not a valid embedded object. Inviting the appropriate participants

> *Correct. Inviting the appropriate participants will help ensure meetings meet their objectives efficiently. Since the managers from the various departments are not involved in the current project, they likely do not offer anything of value at the team meetings and only cause the meetings to run longer than planned. Therefore, the best course of action to prevent the meetings from running late is to discontinue inviting these managers to the meetings.*

Reference:

A Guide to the Project Management Body of Knowledge, (PMBOK® Guide) – Sixth Edition, Project Management Institute Inc., 2017, Page(s) 386

PMP Exam 4

Filtered Mode: Displaying 200 questions

Question 148 of 200
Question ID: 612248

When closing out a project, who is responsible for transferring the ownership of deliverables to the customer?

AError! Not a valid embedded object. The project manager

BError! Not a valid embedded object. The project sponsor

CError! Not a valid embedded object. The project management office

DError! Not a valid embedded object. Anyone on the project team

Question answered incorrectly

Hint:
When does a project manager's responsibility for a project end?

Correct Answer: A

Explanation:

A project manager's responsibility for a project does not end until all the closing processes are complete, including transitioning the project deliverables to the recipient defined in the project management plan. The project manager would be responsible for transferring the project deliverables to the customer during the Close Project or Phase process.

Details for Each Option:

AError! Not a valid embedded object. The project manager

> *Correct. When closing out a project, the project manager would be responsible for transferring ownership of the project deliverables to the assigned stakeholders.*

BError! Not a valid embedded object. The project sponsor

Incorrect. A project sponsor is an individual or a group that authorizes the project and the project manager thru the project charter. The project sponsor would not typically be the one who transfers the ownership of deliverables to the customer.

CError! Not a valid embedded object. The project management office

Incorrect. A project management office (PMO) is an organizational structure that standardizes the project-related governance processes and facilitates the sharing of resources, methodologies, tools, and techniques. The PMO is unlikely to be the one to transfer the ownership of deliverables to the customer.

DError! Not a valid embedded object. Anyone on the project team

Incorrect. This answer choice could be a plausible option because the procedure to transfer the ownership of the project deliverables to the customer or assigned stakeholders are specified in the project management plan. Therefore, theoretically, any team member can be specified in the plan to perform the role. However, since the question does not provide any details on the plan, a more generic choice, i.e. the project manager, would be a better answer to the question asked.

Reference:

Project Management Professional (PMP)® Examination Content Outline, Project Management Institute Inc., June 2015, Domain V, Task 2

PMP Exam 4

Filtered Mode: Displaying 200 questions

Question 149 of 200
Question ID: 612564

You are using expert judgment to develop high-level requirements and identify high-level risks for the project you are currently managing. As part of this effort, you have already documented a list of key stakeholders and preapproved financial resources.

All of the following are considered inputs to this process except:

AError! Not a valid embedded object. Business case

BError! Not a valid embedded object. Enterprise environmental factors

CError! Not a valid embedded object. Organizational process assets

DError! Not a valid embedded object. Project management plan

Question answered incorrectly

Hint:
The document you are working on contains high-level information.

Correct Answer: D

Explanation:

In the scenario, you are documenting high-level requirements and high-level risks for the project you are managing. Therefore, it is reasonable to assume you are in the Develop Project Charter process. Inputs for that process are business documents, including the business case, enterprise environmental factors, organizational process assets, and agreements. The project management plan is not an input to the Develop Project Charter process. Since the question is asking which of the answer choices is 'not' used as an input to that process, the project management plan the correct answer.

Details for Each Option:

AError! Not a valid embedded object. Business case

Incorrect. The business case is a document that represents the information required from a business perspective to justify the existence of the project. The scenario implies you are in the Develop Project Charter process. The business case is among the business documents used as an input to that process. Therefore, the business case is not the correct answer.

BError! Not a valid embedded object. Enterprise environmental factors

Incorrect. Since the scenario describes the development of high-level requirements and an identification of high-level risks, you are in the Develop Project Charter process. Enterprise environmental factors are conditions, not under the immediate control of the team, that influence, constrain, or direct the project. Enterprise environmental factors, such as stakeholders' risk tolerances, are an input to the Develop Project Charter process and, therefore, is an incorrect answer.

CError! Not a valid embedded object. Organizational process assets

Incorrect. According to the scenario, you are in the Develop Project Charter process. The question is asking which of the answer choices is 'not' an input to the Develop Project Charter process. Organizational process assets are an input to the process and is, therefore, an incorrect answer.

DError! Not a valid embedded object. Project management plan

Correct. The project management plan is the document that describes how the project will be executed, monitored and controlled, and closed. Based on the scenario described, the project is in the Develop Project Charter process. The project management plan is developed later in the project life cycle and cannot be the input to the Develop Project Charter process. Therefore, since the question is asking which document is 'not' an input to the Develop Project Charter process, project management plan is the correct answer.

Reference:

A Guide to the Project Management Body of Knowledge, (PMBOK® Guide) – Sixth Edition, Project Management Institute Inc., 2017, Page(s) 75-79

PMP Exam 4

Filtered Mode: Displaying 200 questions

Question 150 of 200
Question ID: 650410

The total planned cost for your project at this stage is $5,000,000. The actual work that has been completed is worth $4,000,000. You have already spent $10,000,000 on the project.

What is the CPI and status of your project?

AError! Not a valid embedded object.0.4 and under planned costs

BError! Not a valid embedded object.0.8 and behind schedule

CError! Not a valid embedded object.0.4 and over planned costs

DError! Not a valid embedded object.0.8 and ahead of schedule

Question answered incorrectly

Hint:
CPI = EV / AC

Correct Answer: C

Explanation:

In this scenario, the earned value (EV) is $4,000,000, the actual costs (AC) are $10,000,000, and the planned value (PV) is $5,000,000. The question is asking you to calculate the cost performance index (CPI) and determine the project status. The CPI is calculated as EV / AC or CPI = $4,000,000 / $10,000,000 which is 0.4. Since the CPI is less than 1.0, the project is over planned costs. Note that the PV of $5,000,000 is not needed to answer the question correctly.

Details for Each Option:

AError! Not a valid embedded object.0.4 and under planned costs

Incorrect. The CPI is calculated as EV / AC or CPI = $4,000,000 / $10,000,000 which is

0.4. Even though the CPI was calculated correctly with this answer choice, the project is over planned costs and not under planned costs.

BError! Not a valid embedded object.0.8 and behind schedule

Incorrect. The SPI for the project is 0.8, and the project is behind schedule. SPI = EV / PV or SPI = $4,000,000 / $5,000,000. However, the question is asking for the CPI and not the SPI.

CError! Not a valid embedded object.0.4 and over planned costs

Correct. The CPI is calculated as EV / AC or CPI = $4,000,000 / $10,000,000 which is 0.4. Since the CPI is less than 1.0, the project is over planned costs.

DError! Not a valid embedded object.0.8 and ahead of schedule

Incorrect. The SPI for the project is 0.8, and the project is behind schedule rather than ahead of schedule. SPI = EV / PV or SPI = $4,000,000 / $5,000,000. Additionally, the question is asking for the CPI and not the SPI.

Reference:

A Guide to the Project Management Body of Knowledge, (PMBOK® Guide) – Sixth Edition, Project Management Institute Inc., 2017, Page(s) 263; see also https://www.project-management-prepcast.com/pmp-formulas

---

PMP Exam 4

Filtered Mode: Displaying 200 questions

Question 151 of 200
Question ID: 613325

As the project manager working on a large, multi-year project, you have conducted an extensive series of training and development activities for the team. This has greatly benefited both the team and the productivity of the project, resulting in a very successful initial year.

What should you use to ensure that your team members will be recognized for their performance after they leave the project?

AError! Not a valid embedded object. Lessons learned register

BError! Not a valid embedded object. Project team assignments

CError! Not a valid embedded object. Personnel assessment

DError! Not a valid embedded object. Team charter

Question answered incorrectly

Hint:
Which answer choice focuses on individual performance?

Correct Answer: C

Explanation:

The scenario implies that you are concerned with the Develop Team process. On longer-term projects, the project manager will either write or contribute to her team members' corporate personnel assessments. Because personnel assessments are organizational process assets, as an output of the Develop Team process, they will have an impact beyond the life of the project and have the potential to directly impact your team members' career prospects.

Details for Each Option:

AError! Not a valid embedded object. Lessons learned register

Incorrect. Although the lessons learned register is used to record knowledge gained during the project, it is not the most effective way to recognize individual performance.

BError! Not a valid embedded object. Project team assignments

Incorrect. Project team assignments is a document that specifies the team members and their roles and responsibilities for the project. This document does not provide information on the performance of the team members and, therefore, would not help ensure that they will be recognized for their performance after they leave the project.

CError! Not a valid embedded object. Personnel assessment

Correct. Writing detailed, positive assessments can directly contribute to your team members career success. Because of the long-term nature of this project and the extensive amount of training and development activity, the project manager may very well be the primary contributor to the team's regular assessments.

DError! Not a valid embedded object. Team charter

Incorrect. The team charter is used to specify team values and operating guidelines; it will not include details of individual performance.

Reference:

A Guide to the Project Management Body of Knowledge, (PMBOK® Guide) – Sixth Edition, Project Management Institute Inc., 2017, Page(s) 344

PMP Exam 4

Filtered Mode: Displaying 200 questions

Question 152 of 200
Question ID: 612958

Who has the responsibility to monitor, record, and report the realized benefits throughout the project?

AError! Not a valid embedded object. Human resources manager

BError! Not a valid embedded object. Project manager

CError! Not a valid embedded object. Project sponsor

DError! Not a valid embedded object. Benefits owner

Question answered incorrectly

Hint:
The responsible party for tracking and reporting project benefits is recorded in the benefits management plan.

Correct Answer: D

Explanation:

The project benefits management plan is the document that specifies how and when the benefits of the project will be delivered. The plan describes the mechanisms that should be in place to measure those benefits. A well-thought-out benefits management plan would specify a benefits owner who is the individual or group responsible for monitoring, recording, and reporting the realized benefits throughout the project.

Details for Each Option:

AError! Not a valid embedded object. Human resources manager

> *Incorrect. Human resources (HR) managers oversee department functions and managing employees. The question is asking about project benefits and not employee benefits. HR*

resource managers may handle employee benefits but not necessarily project benefits.

BError! Not a valid embedded object. Project manager

Incorrect. A project manager is a person assigned by the performing organization to lead the team and is responsible for achieving the project objectives. While a project manager may be responsible for monitoring, recording, and reporting the realized benefits of the project, another answer choice more accurately addresses the question asked.

CError! Not a valid embedded object. Project sponsor

Incorrect. A project sponsor is an individual who formally authorizes the project. A project sponsor is typically a senior manager or executive and is unlikely to be assigned to monitor, record, and report the realized benefits of the project.

DError! Not a valid embedded object. Benefits owner

Correct. A properly prepared benefits management plan identifies a benefits owner that has the responsibility of monitoring, recording, and reporting the realized benefits throughout the project.

Reference:

A Guide to the Project Management Body of Knowledge, (PMBOK® Guide) – Sixth Edition, Project Management Institute Inc., 2017, Page(s) 33

PMP Exam 4

Filtered Mode: Displaying 200 questions

Question 153 of 200
Question ID: 612965

During a status meeting, a team member states that he is having trouble getting the necessary information from the customer, and as a result will not get an important deliverable completed on time. You have not previously heard of any issues with this customer and suspect the team member is simply making excuses for poor work performance.

What is your best course of action?

AError! Not a valid embedded object. Tell the team member not to make any further excuses and get the job done or risk disciplinary action

BError! Not a valid embedded object. Contact the customer right away to discuss the issue

CError! Not a valid embedded object. Schedule a one-on-one meeting with the team member to discuss the issue and possible next steps

DError! Not a valid embedded object. Escalate this issue to the team member's supervisor

Question answered incorrectly

Hint:
Conflict should be addressed early and usually in private, using a direct, collaborative approach.

Correct Answer: C

Explanation:

Conflict management is one of the tools and techniques of the Manage Team process. Successful conflict management involves addressing conflict early using a direct, collaborative approach. In this scenario, the conflict involves a project team member, who may or may not be having a performance issue. Before involving the customer or the employee's supervisor, the project manager should meet with the employee in private to discuss the issue and gather facts before deciding on a course of action.

Details for Each Option:

AError! Not a valid embedded object. Tell the team member not to make any further excuses and get the job done or risk disciplinary action

> *Incorrect. The project manager is jumping to conclusions and accusing the team member of making excuses before knowing all the facts. Perhaps the team member is telling the truth, in which case the project manager will need to figure out a solution. Even if the project manager's suspicions are correct and it is a performance issue on the employee's part, this is best addressed by the project manager in a private meeting with the employee.*

BError! Not a valid embedded object. Contact the customer right away to discuss the issue

> *Incorrect. The project manager should not jump to the step of involving the customer before gathering all the facts. Otherwise, the project manager risks damaging their relationship with the customer. Instead, the project manager should meet one-on-one with the team member to discuss the issue, gather facts, and then decide on the appropriate course of action.*

CError! Not a valid embedded object. Schedule a one-on-one meeting with the team member to discuss the issue and possible next steps

> *Correct. Project managers should aim to address issues with team members as early as possible and in private, making a one-on-one meeting the best answer choice here. In doing so, the project manager can gather more information from the employee to determine the facts and decide on the best course of action.*

DError! Not a valid embedded object. Escalate this issue to the team member's supervisor

> *Incorrect. Even when a project manager is not in a direct supervisory position over the team members, project managers must exercise problem-solving and conflict management skills as part of their project management responsibilities. Project managers should address issues as early as possible and usually in private, using a direct, collaborative approach. Only if this approach fails, or when formal disciplinary action is needed, should the project manager resort to pulling rank.*

Reference:

A Guide to the Project Management Body of Knowledge, (PMBOK® Guide) – Sixth Edition, Project Management Institute Inc., 2017, Page(s) 348

PMP Exam 4

Filtered Mode: Displaying 200 questions

Question 154 of 200

Question ID: 613723

During project execution, some of the project team members are working in different cities. It has come to the attention of the project manager that these team members are multitasking during video conference calls and missing vital information. As a result, team cohesion is lacking which has caused the project to fall behind schedule.

What tool or technique could the project manager use to address the issue and get the project back on schedule?

AError! Not a valid embedded object. Colocation

BError! Not a valid embedded object. Virtual team

CError! Not a valid embedded object. Communication technology

DError! Not a valid embedded object. Cross-functional team

Question answered incorrectly

Hint:
What technique brings the team together to enhance face-to-face communication and team cohesion?

Correct Answer: A

Explanation:

The problem described in the question requires a tool from the Develop Team process to improve the team's productivity. Of the choices provided, only colocation would bring the team together in order to improve team performance. Although colocation is not always possible, the question does not provide enough information to determine if colocation is or is not practical. Therefore it can not be assumed that colocation is impractical. More importantly, the other choices are either not a tool or technique or would not result in improved team cohesion or improved productivity.

Details for Each Option:

AError! Not a valid embedded object. Colocation

Correct. Colocation would bring the project team together in one physical location and enhance the team members' ability to perform more productively as a team.

BError! Not a valid embedded object. Virtual team

Incorrect. The scenario described in the question implies the project team members are currently organized as a virtual team and using video conferencing to interact. Bringing the team members together in one physical location is the best way to address the issue.

CError! Not a valid embedded object. Communication technology

Incorrect. The project team is currently utilizing video conferencing as their primary method of communication. Other than face-to-face communication, using another type of communication technology is unlikely to make the team more cohesive and productive.

DError! Not a valid embedded object. Cross-functional team

Incorrect. A cross-functional team is a term borrowed from agile project management which describes a team that includes practitioners with all the skills necessary to deliver product increments. The problem presented in the question describes multitasking during video conference rather than lack of particular skills required to deliver the product. Therefore, making the team cross-functional is unlikely to resolve the issue.

Reference:

A Guide to the Project Management Body of Knowledge, (PMBOK® Guide) – Sixth Edition, Project Management Institute Inc., 2017, Page(s) 340

PMP Exam 4

Filtered Mode: Displaying 200 questions

Question 155 of 200
Question ID: 612579

As a project manager, you want to establish a culture of continuous improvement with your project team, so you encourage the team to look for and implement small incremental improvements in the development process.

Which of the following are you recommending to the team?

AError! Not a valid embedded object. Kaikaku

BError! Not a valid embedded object. Decomposition

CError! Not a valid embedded object. Ishikawa

DError! Not a valid embedded object. Kaizen

Question answered incorrectly

Hint:
The correct answer is the Japanese word for improvement.

Correct Answer: D

Explanation:

Kaizen is the Japanese word for improvement. A kaizen approach makes incremental change through small steps, thereby establishing a process of continuous improvement. By applying kaizen, a development team can optimize efficiency and quality. While the topic of this question is only briefly mentioned in the *PMBOK® Guide*, the Project Management Professional (PMP)® Examination Content Outline, June 2015, covers knowledge and skills with which PMP aspirants are expected to be familiar. Continuous improvement processes are among these knowledge and skills. Of the available choices, only the kaizen approach would establish a continuous improvement process by encouraging the development team to look for and implement small incremental improvements in the development process.

Details for Each Option:

AError! Not a valid embedded object. Kaikaku

Incorrect. Kaikaku is a Japanese word, which means radical change. While kaizen is focused on incremental improvements, kaikaku is focused on radical improvements.

BError! Not a valid embedded object. Decomposition

Incorrect. Decomposition is a technique used for dividing and subdividing the project scope and project deliverables into smaller, more manageable parts. Decomposition is a technique that can be used to create the work breakdown structure (WBS) but is not related to continuous improvement.

CError! Not a valid embedded object. Ishikawa

Incorrect. Cause-and-effect diagrams are also known as Ishikawa diagrams. This type of diagram breaks down the causes of the problem statement identified into discrete branches. This technique is helpful in identifying the main or root cause of an identified problem but is not used for continuous improvement.

DError! Not a valid embedded object. Kaizen

Correct. Kaizen is the Japanese word for improvement. A kaizen approach makes incremental change through small steps.

Reference:

A Guide to the Project Management Body of Knowledge, (PMBOK® Guide) – Sixth Edition, Project Management Institute Inc., 2017, Page(s) 310; see also https://www.projectmanagement.com/articles/435560/Lean--Agile-and-Kaizen-in-Project-Quality-Management

---

PMP Exam 4

Filtered Mode: Displaying 200 questions

Question 156 of 200
Question ID: 612363

The computer system is hit with a denial-of-service attack for the second time during a project, and the development team is unable to continue working. The project manager immediately reviews the recorded risk response plans and provides the risk owner with an update about this recurring issue.

What else should the project manager do in this scenario?

AError! Not a valid embedded object. Examine the risk register

BError! Not a valid embedded object. Check the lessons learned matrix

CError! Not a valid embedded object. Review the risk management plan

DError! Not a valid embedded object. Research the lessons learned register

Question answered incorrectly

Hint:
The question indicates that a similar event occurred earlier in the project.

Correct Answer: D

Explanation:

The question indicates that a similar event occurred earlier in the project and also suggests that this risk was identified and recorded in the risk register. The realized risk described by the question should trigger the Implement Risk Responses process. One of the inputs of the Implement Risk Responses process is the lessons learned register. The lessons learned earlier in the project with regard to implementing risk responses can be used to improve the effectiveness of the Implement Risk Responses process. It would be beneficial for the project manager to review the lessons learned register to understand the effectiveness of the response in the previous situation and update the response if and when necessary. Therefore, of the available choices, researching the lessons learned register would be the best action to take in this scenario.

Details for Each Option:

AError! Not a valid embedded object. Examine the risk register

Incorrect. The question states that the project manager has reviewed the recorded risk response plans which implies that the project manager has already read the risk register, making this action redundant and unnecessary.

BError! Not a valid embedded object. Check the lessons learned matrix

Incorrect. 'Lessons learned matrix' is a fake term made up for this question. Prospective PMP aspirants should keep in mind that not all terms thrown by the PMI onto their exam will represent factual terminology used in project management or specified in the PMBOK® Guide.

CError! Not a valid embedded object. Review the risk management plan

Incorrect. The risk management plan describes how risk management activities will be structured and performed. Reviewing the risk register for the risk response plan is likely one of the activities specified in the risk management plan to be performed when an identified risk is realized. Based on the scenario provided, you have already reviewed the risk register. Therefore, it is reasonable to assume that the project manager has already reviewed the risk management plan.

DError! Not a valid embedded object. Research the lessons learned register

Correct. The question suggests that a similar event occurred earlier in the project. It would be beneficial for the project manager to review the lessons learned register to understand the effectiveness of the risk response implemented in the previous situation.

Reference:

A Guide to the Project Management Body of Knowledge, (PMBOK® Guide) – Sixth Edition, Project Management Institute Inc., 2017, Page(s) 450

PMP Exam 4

Filtered Mode: Displaying 200 questions

Question 157 of 200
Question ID: 612490

A project manager is leading a product development project and is currently in the process of developing a plan for how the project costs will be planned, structured, and controlled.

Which of the following is least likely to be developed during this process and included in the plan?

AError! Not a valid embedded object. The documented economic feasibility study which will be used to help measure project success at the end of the project

BError! Not a valid embedded object. The units of measure for each resource used on the project such as meters, liters, tons, kilometers, or cubic years for quantity measures

CError! Not a valid embedded object. The degree to which cost estimates will be rounded up or down, based on the scope of the activities and magnitude of the project

DError! Not a valid embedded object. The acceptable range used in determining realistic cost estimates, and, if applicable, an amount for contingencies

Question answered incorrectly

Hint:
Which answer choice describes an activity that is performed as part of the pre-project work?

Correct Answer: A

Explanation:

The project business case is a documented economic feasibility study used to establish the validity of the benefits of a selected component lacking sufficient definition and that is used as a basis for the authorization of further project management activities. The business case lists the objectives and reasons for project initiation. It helps to measure the project success at the end of the project against the project objectives. The question suggests that the cost management plan is being developed which occurs during the Plan Cost Management process. The project business case is developed during pre-project work and not the Plan Cost Management process. Units of measure, level of precision, and level of accuracy are all established by the cost management

plan. Note, the question is asking which answer choice is 'least' likely to be developed during this process. Hence, of the available choices, the business case is least likely to be developed during the Plan Cost Management process and is, therefore, the best answer to the question asked.

Details for Each Option:

AError! Not a valid embedded object. The documented economic feasibility study which will be used to help measure project success at the end of the project

> *Correct. This answer choice describes the project business case which is developed during pre-project work and not the Plan Cost Management process as implied by the question.*

BError! Not a valid embedded object. The units of measure for each resource used on the project such as meters, liters, tons, kilometers, or cubic years for quantity measures

> *Incorrect. The question suggests that the cost management plan is being developed. Units of measure are established in the cost management plan.*

CError! Not a valid embedded object. The degree to which cost estimates will be rounded up or down, based on the scope of the activities and magnitude of the project

> *Incorrect. This answer choice describes the level of precision which will be used for the cost estimates. The level of precision is established in the cost management plan, as implied by the question.*

DError! Not a valid embedded object. The acceptable range used in determining realistic cost estimates, and, if applicable, an amount for contingencies

> *Incorrect. The question suggests that the Plan Cost Management process is being performed with the development of the cost management plan. The level of accuracy is established as part of the cost management plan.*

Reference:

A Guide to the Project Management Body of Knowledge, (PMBOK® Guide) – Sixth Edition, Project Management Institute Inc., 2017, Page(s) 30, 238

PMP Exam 4

Filtered Mode: Displaying 200 questions

Question 158 of 200
Question ID: 613127

A new project manager takes over a project and holds a team meeting to introduce himself and explain his leadership style. He tells the team members that he wants them to work independently, and that he will allow the team to make their own decisions and establish their own goals.

What leadership style does the project manager demonstrate?

AError! Not a valid embedded object. Service-oriented

BError! Not a valid embedded object. Avoiding

CError! Not a valid embedded object. Referent

DError! Not a valid embedded object. Laissez-faire

Question answered incorrectly

Hint:
Which of the available choices is a hands-off leadership style?

Correct Answer: D

Explanation:

Of the available choices, only laissez-faire is a leadership style. Laissez-faire is a leadership style characterized by allowing the team to make their own decisions and establish their own goals. It is also referred to as a hands-off approach.

Details for Each Option:

AError! Not a valid embedded object. Service-oriented

Incorrect. Service-oriented is a personality characteristic and not a leadership style.

BError! Not a valid embedded object. Avoiding

Incorrect. Avoiding is a form of power as opposed to a leadership style.

CError! Not a valid embedded object. Referent

Incorrect. Referent is a form of power rather than a leadership style.

DError! Not a valid embedded object. Laissez-faire

Correct. Laissez-faire is a leadership style characterized by allowing the team to make their own decisions and establish their own goals.

Reference:

A Guide to the Project Management Body of Knowledge, (PMBOK® Guide) – Sixth Edition, Project Management Institute Inc., 2017, Page(s) 65, 341

PMP Exam 4

Filtered Mode: Displaying 200 questions

Question 159 of 200
Question ID: 613202

A project manager is assigned to a project that involves many vendors. During project execution, business priorities shift, and the sponsor informs the project manager that the project needs to be terminated.

What should the project manager do first?

AError! Not a valid embedded object. Allow the vendors to complete their work since there is a legally binding contract

BError! Not a valid embedded object. Reject all vendors' deliverables to avoid paying for something that is no longer needed

CError! Not a valid embedded object. Notify the vendors that the project has been terminated

DError! Not a valid embedded object. Begin the Close Procurements process

Question answered incorrectly

Hint:
Which answer choice represents the most reasonable action that should be taken when a project that involves vendors is terminated prematurely?

Correct Answer: C

Explanation:

The question states that a project has been terminated during project execution. Regardless of the fact that the project has been terminated prematurely, the activities that are associated with the Control Procurements process and Close Project or Phase process still need to be performed. The project manager, or an authorized procurement administrator, provides the seller with formal written notice that the contract has been completed, or in this case, terminated prematurely. Notifying the vendors that the project was terminated is consistent with the project manager engaging all the proper stakeholders in the process. The actual termination procedure(s) will be specified in the terms and conditions of the contracts signed with each vendor.

Details for Each Option:

AError! Not a valid embedded object. Allow the vendors to complete their work since there is a legally binding contract

> *Incorrect. The terms and conditions of the contract should provide guidance on legal obligations in the event the project is terminated prematurely. Even if the performing organization decided to allow some or all of the vendors to finish their work, it would be a business decision and not just because of the existence of a contract. Since the contents of the termination clause are unknown from the scenario, it is not clear if the vendors should be allowed to complete their work.*

BError! Not a valid embedded object. Reject all vendors' deliverables to avoid paying for something that is no longer needed

> *Incorrect. Rejecting deliverables for the sole purpose of avoiding payment for work that has been completed but no longer needed would violate the spirit if not the letter of the contract. Additionally, such action would conflict with the aspirational standard of honesty as covered in the PMI Code of Ethics and Professional Conduct. The terms and conditions of the contract (which are unknown from the scenario) should provide guidance on legal obligations in the event the project is terminated early.*

CError! Not a valid embedded object. Notify the vendors that the project has been terminated

> *Correct. During the Control Procurements process, notifying the vendors that the project was terminated is consistent with the best project management practices. Later on, as part of the Close Project or Phase process, the reasons for any action taken when a project is terminated before completion should be investigated and documented.*

DError! Not a valid embedded object. Begin the Close Procurements process

> *Incorrect. Close Procurements is not a process specified in the PMBOK® Guide.*

Reference:

A Guide to the Project Management Body of Knowledge, (PMBOK® Guide) – Sixth Edition, Project Management Institute Inc., 2017, Page(s) 499, 123, 128, 489, 542

PMP Exam 4

Filtered Mode: Displaying 200 questions

Question 160 of 200
Question ID: 612087

A project manager is in the process of implementing the communications management plan for a project to construct a new hydroelectric plant. The performing organization is based in the United States, and the hydroelectric plant will be built in a remote region of Brazil.

As it relates to project communications, which of the following tailoring considerations is the least relevant?

AError! Not a valid embedded object. Physical location

BError! Not a valid embedded object. Language

CError! Not a valid embedded object. Communication technology

DError! Not a valid embedded object. Policy compliance and auditing

Question answered incorrectly

Hint:
Which answer choice represents a tailoring consideration that is more typically associated with the Project Quality Management processes?

Correct Answer: D

Explanation:

The question suggests that the project manager is conducting the Manage Communications by implementing the communications management plan. All but one of the answer choices represent tailoring considerations associated with the communications management processes. Keep in mind that the question is asking which of the provided options is 'least' relevant to tailoring considerations for communications management. Policy compliance and auditing represents a tailoring consideration more typically associated with the Project Quality Management processes rather than Project Communications Management. Therefore, policy compliance and auditing is 'least' relevant to the tailoring considerations of the communications management processes. The incorrect answer choices represent tailoring considerations which are important to managing communications between locations where different languages are

typically spoken.

Details for Each Option:

AError! Not a valid embedded object. Physical location

Incorrect. The significant distance between the performing organization and the project location must be a consideration for the project. Will the project team be co-located at the project site or will some team members be located at the performing organization's corporate office necessitating the use of a virtual team? How will the different time zones affect virtual meetings or other communications?

BError! Not a valid embedded object. Language

Incorrect. There is likely to be a language barrier among stakeholders between the English and Portuguese languages. Will the project require the use of translators? Will project documents need to be recorded in multiple languages?

CError! Not a valid embedded object. Communication technology

Incorrect. Communications technology may be a factor as the hydroelectric plant is located in a remote region. Is cellular service available or will satellite phones be required? How will data be transmitted between the project site and the performing organization's corporate office?

DError! Not a valid embedded object. Policy compliance and auditing

Correct. Policy compliance and auditing represents a tailoring consideration more typically associated with the Project Quality Management processes rather than the Project Communications Management processes.

Reference:

A Guide to the Project Management Body of Knowledge, (PMBOK® Guide) – Sixth Edition, Project Management Institute Inc., 2017, Page(s) 365

PMP Exam 4

Filtered Mode: Displaying 200 questions

Question 161 of 200
Question ID: 613050

An organization has initiated a large project. As the project manager completes the Identify Stakeholder process, the sponsor informs the project manager that the project charter is approved.

What should the project manager do next?

AError! Not a valid embedded object. Develop a project schedule network diagram

BError! Not a valid embedded object. Hold a project kick-off meeting

CError! Not a valid embedded object. Inform stakeholders of the approved project charter

DError! Not a valid embedded object. Hold a bidder conference

Question answered incorrectly

Hint:
Keep stakeholders apprised of project status.

Correct Answer: C

Explanation:

Task 8 of Domain I in the Project Management Professional (PMP)® Examination Content Outline reads, "Inform stakeholders of the approved project charter to ensure a common understanding of the key deliverables, milestones, and their roles and responsibilities." The question states the project charter has been approved while the project manager completes the Identify Stakeholders process. The next logical step would be informing the identified stakeholders of the approved project charter. By doing this, all those involved with the project will be aware that the project is proceeding and understand the key deliverables, milestones, and their roles and responsibilities. It is important for the prospective PMP aspirants to be familiar with the Examination Content Outline because the *PMBOK® Guide* is not the only source used by the Project Management Institute (PMI)® to design their questions.

Details for Each Option:

AError! Not a valid embedded object. Develop a project schedule network diagram

Incorrect. A project schedule network diagram is a graphical representation of the logical relationships among the project schedule activities. The diagram is an output of the Sequence Activities process, which belongs to the Planning Process Group, while the scenario implies the project is in initiation.

BError! Not a valid embedded object. Hold a project kick-off meeting

Incorrect. Typically, for large projects (as the one described in the scenario), kick-off meetings take place at the end of planning and the start of executing. Since the project manager has just completed the Identify Stakeholders process in the Initiating Process Group, having a kick-off meeting would be premature, making this answer incorrect. Note, while it is true that kick-off meetings typically occur with the end of planning and the start of executing, for small projects, where there is one team performing both the project planning and execution, the kick-off meeting often takes place after initiation as the first action that begins the Planning Process Group.

CError! Not a valid embedded object. Inform stakeholders of the approved project charter

Correct. The approved project charter formally authorizes the existence of a project and provides the project manager with the authority to use company resources. The project charter includes high-level information, such as project objectives, milestones, and the roles and responsibilities of key stakeholders and its approval should be communicated to all the stakeholders before project planning starts, making this choice the best answer to the question asked.

DError! Not a valid embedded object. Hold a bidder conference

Incorrect. A bidder conference is a meeting between the buyer and prospective sellers that is held prior to proposal submittal. According to the scenario, the project is in initiation. Bidder conferences are typically conducted during project execution.

Reference:

A Guide to the Project Management Body of Knowledge, (PMBOK® Guide) – Sixth Edition, Project Management Institute Inc., 2017, Page(s) 53, 81, 561; see also Project Management Professional (PMP)® Examination Content Outline, Project Management Institute Inc., June 2015, Domain 1, Task 8

PMP Exam 4

Filtered Mode: Displaying 200 questions

Question 162 of 200
Question ID: 612228

You are leading a project to build drones capable of flying at ultra-high altitudes. One day during project execution, your technical lead informs you that they went ahead and made a change to the drone's navigation system, making the drone capable of flying faster and higher. You check project documents but find no evidence of this new capability.

What should you do immediately?

AError! Not a valid embedded object. Inform the project sponsor of the new flight capabilities

BError! Not a valid embedded object. Update the project development approach to better manage changes

CError! Not a valid embedded object. Record the change in the change log

DError! Not a valid embedded object. Recommend that the technical lead will be rewarded for their effort

Question answered incorrectly

Hint:
Your technical lead has just introduced updates to a critical component of the product; you should make a note.

Correct Answer: C

Explanation:

When changes are made on a project, they must be in consideration of a range of factors such as project scope, schedule, cost, quality, risk, etc. As part of the Perform Integrated Change Control process, all changes, whether approved, denied, or postponed, must be recorded in the change log. This document serves as a repository for changes that have occurred during the project or phase, as well as their current status. According to the scenario, you (as the project manager) checked project documents but found no evidence of the new capability, implying the technical lead did not apply the proper change management process while implementing the change. Therefore, to avoid any further discrepancies on the project resulting from this undocumented

change, the first immediate step to take is to record the change in the change log for tracking and follow-up. Actions described in other answer choices represent plausible options; however, they could be taken only after the change is documented.

Note, the scenario describes gold plating or scope creep, a practice that should be avoided.

Details for Each Option:

AError! Not a valid embedded object. Inform the project sponsor of the new flight capabilities

> *Incorrect. This answer choice is incorrect because it does not address the main issue of the question, which is the fact that the change introduced by the technical lead has not been documented. One of the primary responsibilities of a project manager is to have and maintain control over the Perform Integrated Change Control process. Simply going to the sponsor and informing them of new flight capabilities would disregard the fact an unauthorized change has been implemented. Doing so could undermine the credibility of the project manager, no matter if the change was positive or not. As such, this is not the best answer choice of those provided.*

BError! Not a valid embedded object. Update the project development approach to better manage changes

> *Incorrect. Immediately updating or switching the development approach should not be taken to better manage changes that occur on a project. This is because the project development approach is an additional component of the project management plan that describes the product, service, or result development approach. These include predictive, iterative, agile, or hybrid-based approaches. As part of the project management plan, which is a controlled document, the project development approach cannot be updated at-will by the project manager.*

CError! Not a valid embedded object. Record the change in the change log

> *Correct. The technical lead has altered a critical component of the product, and this needs to be documented immediately. By doing so, a record of the changes that have occurred on the project is maintained. This allows a project manager to better track and follow-up on the results of changes as the project moves through execution towards completion. Moreover, recording the change in the change log helps to emphasize and convey to the team the necessity for proper change control on a project. Despite what may appear to be positive effects from an unauthorized change given in the scenario, a change control process is mandatory for every project. Without it, scope creep, or the uncontrolled expansion of product or project scope without adjustments to time, cost, and resources is likely to occur.*

DError! Not a valid embedded object. Recommend that the technical lead will be rewarded for

their effort

Incorrect. Instead of rewarding the technical lead for their effort, it is likely that the technical lead should be reprimanded for implementing an unauthorized change and reminded of the importance of the change control process.

Reference:

A Guide to the Project Management Body of Knowledge, (PMBOK® Guide) – Sixth Edition, Project Management Institute Inc., 2017, Page(s) 120

Live Feedback™ Back to Results

Prev Next

PMP Exam 4

Filtered Mode: Displaying 200 questions

Question 163 of 200
Question ID: 613211

An executive steering committee meeting is scheduled for tomorrow, and you are required to make a presentation about your project's progress.

Which of the following presentation formats is best used in this type of meeting?

AError! Not a valid embedded object. Detailed Gantt bar chart

BError! Not a valid embedded object. Project schedule network diagram

CError! Not a valid embedded object. Master schedule of milestones

DError! Not a valid embedded object. Hammock activity summary chart

Question answered incorrectly

Hint:
In management meetings, you are looking for a chart that gives a high-level overview.

Correct Answer: C

Explanation:

Milestone charts, also known as master schedules, are regarded as an effective way to communicate project progress to senior executives. When reporting on a project in progress, the milestone chart includes a line often called a data date, or the point in time when the status of the project is recorded. To help executives and key stakeholders make decisions about the project, the milestone charts provide just enough detail about major deliverables and key handoffs among operational departments or external organizations.

Details for Each Option:

AError! Not a valid embedded object. Detailed Gantt bar chart

Incorrect. Henry Gantt invented a bar chart of schedule information, listing activities on the vertical axis, showing dates on the horizontal axis, and activity durations as horizontal bars placed according to start and finish dates. Modern Gantt charts show the dependency relationships between activities and current schedule status with arrows. The Gantt chart shows too much technical detail for an executive or key stakeholder presentation.

BError! Not a valid embedded object. Project schedule network diagram

Incorrect. A project schedule network diagram is used by both the precedence diagramming method and the critical path method to develop a viable schedule. It displays the milestones at the beginning and end, all the activities and diverging paths, the logical relationships, durations, start and end days, and float. However, the project schedule network has far too much technical detail for an executive or key stakeholder presentation.

CError! Not a valid embedded object. Master schedule of milestones

Correct. The summary form of the project schedule's milestones is often called the master schedule or milestone schedule. This summary level of detail is most suitable for executives and key stakeholders who are more concerned about the scheduled start or completion of major deliverables and key external interfaces.

DError! Not a valid embedded object. Hammock activity summary chart

Incorrect. A comprehensive summary activity, which is sometimes called a hammock activity, may be used in schedule bar chart reports. The hammock represents a series of activities between milestones or across multiple interdependent work packages. Bar chart schedule models may use hammock activities for the purpose of control and management communications. However, 'hammock activity summary chart' is a made-up term.

Reference:

A Guide to the Project Management Body of Knowledge, (PMBOK® Guide) – Sixth Edition, Project Management Institute Inc., 2017, Page(s) 217-219

PMP Exam 4

Filtered Mode: Displaying 200 questions

Question 164 of 200
Question ID: 612419

A project manager is leading a new product development project. During project execution, the competitive advantage of this new product is threatened when another company is first to market with a similar product. This risk had been identified during initial planning and placed on a watch list.

What should the project manager do next?

AError! Not a valid embedded object. Analyze the impact of the risk on the project objectives

BError! Not a valid embedded object. Risks on the watch list do not have planned responses and can be ignored

CError! Not a valid embedded object. Apply the contingency response plan developed for this risk

DError! Not a valid embedded object. Terminate the project since the competitive advantage has been lost

Question answered incorrectly

Hint:
Risks placed on the watch list do not have an associated risk response plan.

Correct Answer: A

Explanation:

The question implies that the project manager needs to perform the Implement Risk Response process for an identified risk that has been placed on the watch list. The risk register may include a watch list for low priority risks or risks, which require further analysis. While the competitive threat may be considered a high-priority risk or a risk requiring a prompt analysis and appropriate response plan, the scenario suggests this risk was placed on the watch list (for reasons not specified in the question text). A response plan is not developed for risks placed on the watch list; rather these risks are just monitored throughout the project. In case their potential impact on the project changes, further analysis is required to develop a risk response. Since an identified project risk has occurred in this scenario, and there is no response planned for this risk,

the most logical next step for the project manager is, among the available choices, to analyze the impact of this risk to the project objectives to determine the best course of action.

Details for Each Option:

AError! Not a valid embedded object. Analyze the impact of the risk on the project objectives

> *Correct. Risks placed on the watch list do not have an associated risk response plan. Since an identified project risk has occurred without an agreed-upon response plan, the most logical next step for the project manager is to analyze the impact of this risk on the project objectives to determine the best course of action.*

BError! Not a valid embedded object. Risks on the watch list do not have planned responses and can be ignored

> *Incorrect. While it is true that risks placed on the watch list do not have planned responses, these risks cannot simply be ignored. When a risk is realized, a risk analysis should be conducted to understand the impact of the risk in order to determine the best course of action.*

CError! Not a valid embedded object. Apply the contingency response plan developed for this risk

> *Incorrect. Risks placed on the watch list do not have responses developed. Instead, these risks are just monitored throughout the project. When their potential impact on the project changes, further analysis is required to develop a risk response.*

DError! Not a valid embedded object. Terminate the project since the competitive advantage has been lost

> *Incorrect. It would be premature to terminate the project solely on the basis that another company has introduced a competing product. If an adequate response cannot be developed for the risk, further analysis of the situation should be done and appropriate actions taken (including a possibility of terminating the project).*

Reference:

A Guide to the Project Management Body of Knowledge, (PMBOK® Guide) – Sixth Edition, Project Management Institute Inc., 2017, Page(s) 427, 440, 450; see also https://www.pmi.org/learning/library/project-risk-management-success-tool-6078

PMP Exam 4

Filtered Mode: Displaying 200 questions

Question 165 of 200
Question ID: 612178

You are planning a highway construction project, and you have just completed the development of the quality management plan. Your organization requires that the project management office (PMO) review and approve all components of project management plans. You submit the quality management plan to the PMO for review, and a few days later they indicate that an element was missing.

What element of the quality management plan might you have most likely missed?

AError! Not a valid embedded object. Release and iteration length

BError! Not a valid embedded object. High-level project description, boundaries, and key deliverables

CError! Not a valid embedded object. Process that specifies how formal acceptance of the completed project deliverables will be obtained

DError! Not a valid embedded object. Procedures that deal with nonconformance, corrective actions procedures, and continuous improvement procedures

Question answered incorrectly

Hint:
The quality management plan is an output of the Plan Quality Management process.

Correct Answer: D

Explanation:

Major procedures relevant to the project, such as dealing with nonconformance, corrective actions procedures, and continuous improvement procedures are included in the quality management plan. The other options are elements of other project documents including the schedule management plan, scope management plan, and project charter.

Details for Each Option:

AError! Not a valid embedded object. Release and iteration length

> *Incorrect. The release and iteration length are specified in the schedule management plan as opposed to the quality management plan.*

BError! Not a valid embedded object. High-level project description, boundaries, and key deliverables

> *Incorrect. High-level project description, boundaries, and key deliverables are captured in the project charter and not the quality management plan.*

CError! Not a valid embedded object. Process that specifies how formal acceptance of the completed project deliverables will be obtained

> *Incorrect. The process that specifies how formal acceptance of the completed project deliverables will be obtained is part of the scope management plan rather than the quality management plan.*

DError! Not a valid embedded object. Procedures that deal with nonconformance, corrective actions procedures, and continuous improvement procedures

> *Correct. Major procedures relevant to the project, such as dealing with nonconformance, corrective actions procedures, and continuous improvement procedures are included in the quality management plan.*

Reference:

A Guide to the Project Management Body of Knowledge, (PMBOK® Guide) – Sixth Edition, Project Management Institute Inc., 2017, Page(s) 286

PMP Exam 4

Filtered Mode: Displaying 200 questions

Question 166 of 200
Question ID: 612298

You are leading a multi-phase project.

What should you do at the end of each phase?

AError! Not a valid embedded object. Monitor stakeholder engagement

BError! Not a valid embedded object. Transfer ownership of the deliverables

CError! Not a valid embedded object. Verify the deliverables

DError! Not a valid embedded object. Update business documents

Question answered incorrectly

Hint:
What process group is described in the scenario?

Correct Answer: B

Explanation:

Transferring ownership of the deliverables is an action that must be done at the end of each phase and at the end of the project; otherwise, the benefits of the project would not be realized. Typically, a project's product, service, or result is transferred to the next phase of the project or to production and/or operations.

Details for Each Option:

AError! Not a valid embedded object. Monitor stakeholder engagement

> *Incorrect. Monitoring the engagement of stakeholders is done as part of the Monitor Stakeholder Engagement process and is performed in the Monitoring and Controlling Process Group, while the question is asking what should be done at the end of each phase,*

implying to select an activity performed in a Close Project or Phase process.

BError! Not a valid embedded object. Transfer ownership of the deliverables

Correct. Transferring ownership of deliverables to the assigned stakeholders according to the project management plan facilitates project closure. At the end of each phase, the project manager should ensure the output is handed over to the responsible party of the next phase, making this choice the best answer to the question asked.

CError! Not a valid embedded object. Verify the deliverables

Incorrect. Verified deliverables are an output of the Control Quality process, but the question asks what should be done at the end of each phase, implying to select an activity performed in the Close Project or Phase process, making this choice an incorrect answer.

DError! Not a valid embedded object. Update business documents

Incorrect. Business documents, such as the business case and the benefits management plan, are an input to the Close Project or Phase process and used to determine whether the expected outcomes from the economic feasibility study used to justify the project or phase occurred and whether the benefits of the project or phase were achieved as planned. However, these documents are not updated at the end of each phase.

Reference:

A Guide to the Project Management Body of Knowledge, (PMBOK® Guide) – Sixth Edition, Project Management Institute Inc., 2017, Page(s) 123

PMP Exam 4

Filtered Mode: Displaying 200 questions

Question 167 of 200

Question ID: 610049

As a project execution begins, high winds prevent a team from installing the windows as scheduled. These weather conditions were accounted for in planning, but no one anticipated that the speed of the wind would be that strong.

What tool or technique would the project manager use to determine if he will be able to complete the project according to the project management plan?

AError! Not a valid embedded object. Quality audit

BError! Not a valid embedded object. Reserve analysis

CError! Not a valid embedded object. Pareto diagram

DError! Not a valid embedded object. Tornado diagram

Question answered incorrectly

Hint:
Consider the difference between tools or techniques that help identify, analyze, and monitor project risks.

Correct Answer: B

Explanation:

The scenario implies the project manager is performing the Monitor Risks process. Reserve analysis is among the tools and techniques of this process and can be used to assess project risk contingency reserves that will be used to alleviate the impact of identified risks in a project such as a schedule estimate uncertainty or any other identified project risk. Reserve analysis allows the project team to ensure that proper contingencies are available to mitigate or address risks identified during the project's planning or execution. In this case, the project manager would perform a reserve analysis to determine if there is sufficient "reserve" in the project schedule to accommodate the delays due to the high winds.

Details for Each Option:

AError! Not a valid embedded object. Quality audit

Incorrect. A quality audit, which is typically used in the Manage Quality process, is a structured independent process to determine if project activities comply with organizational and project policies, processes, and procedures. While the results of the quality audit may and often do help to identify project risks, they are not a technique that is used to assess contingency reserves, which is required in this case.

BError! Not a valid embedded object. Reserve analysis

Correct. Reserve analysis determines if adequate reserves have been set aside to address identified risks as well as uncertainty in schedule duration, budget, estimated cost or funds for the project. Reserve analysis ensures that the proper amount of contingency reserves are available to address risk in a project. The project manager conducts a reserve analysis to see if the plan's schedule reserve (i.e., contingency reserve) is adequate to sustain the schedule delays at the rate his team is experiencing high winds.

CError! Not a valid embedded object. Pareto diagram

Incorrect. A Pareto diagram is a special form of a histogram or vertical bar chart, which is used primarily to display the frequency or consequences of defects that are determined during the Control Quality process. It is not a technique that is used to assess contingency reserves but instead a tool to identify the likely source of issues that have occurred.

DError! Not a valid embedded object. Tornado diagram

Incorrect. A tornado diagram is used in a sensitivity analysis to characterize a number of risks and to determine which risk is likely to have the greatest impact or to assess the impact of variables that have a high degree of uncertainty and compare them to other variables, which are more stable. A tornado diagram is used in the analysis of identified risks and is not a tool or technique in assessing contingency reserves.

Reference:

A Guide to the Project Management Body of Knowledge, (PMBOK® Guide) – Sixth Edition, Project Management Institute Inc., 2017, Page(s) 456, 202

PMP Exam 4

Filtered Mode: Displaying 200 questions

Question 168 of 200
Question ID: 610085

During a presentation to your project sponsor, you mention the code of accounts. She is unfamiliar with the term and asks for clarification.

Which of the following would you use to explain the code of accounts?

AError! Not a valid embedded object. Risk breakdown structure

BError! Not a valid embedded object. Project budget

CError! Not a valid embedded object. Work breakdown structure

DError! Not a valid embedded object. Risk register

Question answered incorrectly

Hint:
Your sponsor needs to know what helps identify work packages in an organized and numerical fashion.

Correct Answer: C

Explanation:

A code of accounts is a numbering system that is used to uniquely identify each component of a work breakdown structure (WBS), which in turn helps to better monitor and control the project. A code of accounts assigned to work packages in a WBS may also be linked to an organization's accounting department to help the team track and report the actual costs of work package to their planned costs.

Details for Each Option:

AError! Not a valid embedded object. Risk breakdown structure

Incorrect. A risk breakdown structure (RBS) is a hierarchical representation of potential sources of risk for the project. An RBS is used to help a project team consider the full range of sources from which individual project risks may arise but typically does not contain a code of accounts.

BError! Not a valid embedded object. Project budget

Incorrect. The project budget is the approved cost estimate for the project and is created as part of the Determine Budget process. Most often, a project budget is created by aggregating the costs of all activities, work packages, control accounts, any contingency reserves, and any management reserves without the use of a code of accounts.

CError! Not a valid embedded object. Work breakdown structure

Correct. A code of accounts is a numbering system that is used to uniquely identify each component of a work breakdown structure (WBS), which in turn helps to better monitor and control the project. The WBS and its code of accounts are developed during the Create WBS process and are used frequently throughout the project life cycle.

DError! Not a valid embedded object. Risk register

Incorrect. A risk register is an output of the Identify Risks process. It contains information such as a list of identified risks, a list of risk responses, and the risk owners responsible for implementing risk responses. Although a risk register may contain additional information such as risk title, risk category, and current risk status, a risk register typically not contain a code of accounts.

Reference:

A Guide to the Project Management Body of Knowledge, (PMBOK® Guide) – Sixth Edition, Project Management Institute Inc., 2017, Page(s) 161-162, 701

PMP Exam 4

Filtered Mode: Displaying 200 questions

Question 169 of 200
Question ID: 613710

A project manager has just been informed that critical materials are on back order, which threatens the project's deadline. After investigating the problem, the project manager decides that escalating the issue internally is the best solution.

The escalation procedure is an example of what part of the project management framework?

AError! Not a valid embedded object. Requirements management

BError! Not a valid embedded object. Enterprise environmental factors

CError! Not a valid embedded object. Change management

DError! Not a valid embedded object. Organizational process assets

Question answered incorrectly

Hint:
Procedures, policies, and, processes that are specific to an organization are known as what?

Correct Answer: D

Explanation:

The project manager in this scenario chose to escalate the issue internally as the solution to the problem of the back ordered materials. Each organization would have their own escalation policies and procedures in their organizational process assets.

Details for Each Option:

AError! Not a valid embedded object. Requirements management

Incorrect. Requirements management refers to the process by which project and product

requirements are analyzed, documented, and managed.

BError! Not a valid embedded object. Enterprise environmental factors

Incorrect. Enterprise environmental factors are conditions, not under the immediate control of the team, which influence the project. This question is asking about an escalation procedure which is typically part of the organizational process assets that can be updated throughout the project lifecycle, i.e., an action that is under the control of the project team making this an incorrect choice.

CError! Not a valid embedded object. Change management

Incorrect. Change management refers to the change control system for a project and does not address escalation procedures.

DError! Not a valid embedded object. Organizational process assets

Correct. Organizational process assets include procedures, policies, and plans that are specific to the performing organization. An internal escalation procedure is an example of an organizational process asset.

Reference:

A Guide to the Project Management Body of Knowledge, (PMBOK® Guide) – Sixth Edition, Project Management Institute Inc., 2017, Page(s) 355

PMP Exam 4

Filtered Mode: Displaying 200 questions

Question 170 of 200

Question ID: 625111

Due to unforeseen challenges, it has been determined that your original budget of $500,000 is no longer realistic. You have estimated that the project will eventually cost $600,000. The table below represents the current status of the project. The method used to determine the earned value is based on percent complete.

What is the cost performance efficiency that must be maintained to complete the project based on the estimate at completion?

Task Name	Start Date	End Date	Duration (Days)	Planned Value	Actual Cost	(
Project Total	**8/1**	**12/13**	134	**$ 500,000.00**	**$ 200,000.00**	
Select Site	8/1	8/12	11	$ 15,000.00	$ 14,000.00	
Negotiate Lease	8/15	8/26	11	$ 10,000.00	$ 11,000.00	
Perform Civil Works	8/29	10/7	39	$ 250,000.00	$ 175,000.00	
Perform Electrical Works	10/10	11/18	39	$ 75,000.00	$ -	
Perform Telecom Works	11/21	12/2	11	$ 125,000.00	$ -	
Commission Site	12/5	12/9	4	$ 20,000.00	$ -	
Inspection with Customer	12/12	12/13	1	$ 5,000.00	$ -	

AError! Not a valid embedded object.1.50

BError! Not a valid embedded object.0.75

CError! Not a valid embedded object.0.88

DError! Not a valid embedded object.1.17

Question answered incorrectly

Hint:

The cost performance efficiency is TCPI. The formula for the TCPI based on the EAC is: TCPI = (BAC - EV) / (EAC - AC)

Correct Answer: C

Explanation:

The to-complete performance index (TCPI) is a measure of the cost performance that is required to be achieved with the remaining resources to meet a specified management goal, expressed as the ratio of the cost to finish the outstanding work to the remaining budget. In other words, the TCPI is the cost performance efficiency that must be maintained to complete the project based on the specified budget. In the scenario described, the question is asking to determine the cost performance efficiency that must be maintained to complete the project based on the estimate at completion (EAC). In this case, the TCPI should be calculated using the formula that considers the EAC, i.e., TCPI = (BAC - EV) / (EAC - AC), where BAC is budget at completion, EAC is estimate at completion, EV is earned value, and AC is actual costs. The BAC for this project is provided as $500,000 which is the planned value for the project. The EV is the sum of the planned work completed, which, in this case, is 100% of activity 1, 100% of activity 2, and 50% of activity 3. AC is the sum of the costs for each of the individual activities. The AC values for each activity are provided in the chart. The EAC is given in the scenario, "You have estimated that the project will eventually cost $600,000." Note, since the scenario mentions that the method used to determine the earned value is based on percent complete, the earned value of a partially completed work package is calculated by multiplying the planned value of the work package by its the percent complete.

The calculations are as follows:

EV = EV of activity 1 + EV of activity 2 + EV of activity 3 = (1 x $15,000) + (1 x $10,000) + (0.50 x $250,000) = $150,000

AC = AC of activity 1 + AC of activity 2 + AC of activity 3 = $14,000 + $11,000 + $175,000 = $200,000

TCPI = (BAC - EV) / (EAC - AC) = ($500,000 - $150,000) / ($600,000 - $200,000) = 0.88

The TCPI of 0.88 means that in order to complete the project with the new budget of EAC = $600,000 instead of the original budget of BAC = $500,000, the cost performance efficiency of 0.88 must be maintained. Note that the TCPI can also be calculated using only the BAC and not the EAC. However, since the question indicates that the original budget is no longer valid and provides a new estimate at completion, the EAC was used to calculate the TCPI.

Details for Each Option:

AError! Not a valid embedded object.1.50

Incorrect. This answer choice represents an incorrect usage of the TCPI formula where the BAC and EAC are transposed.

BError! Not a valid embedded object.0.75

Incorrect. This answer choice represents the CPI, which can be calculated as: CPI = EV / AC = $150,000 / $200,000 = 0.75. However, the question is asking for the TCPI and not the CPI.

CError! Not a valid embedded object.0.88

Correct. The question is asking for the to-complete performance index (TCPI) based on the estimate at completion, which can be calculated as: TCPI = (BAC - EV) / (EAC - AC) = ($500,000 - $150,000) / ($600,000 - $200,000) = 0.88.

DError! Not a valid embedded object.1.17

Incorrect. This answer choice represents the TCPI that should be maintained to complete the project at its original budget, the BAC. The formula for such case is: TCPI = (BAC - EV) / (BAC - AC). If the TCPI is calculated using the BAC and not including the EAC, then the result would be 1.17. However, the question is asking for the TCPI to be calculated using the EAC.

Reference:

A Guide to the Project Management Body of Knowledge, (PMBOK® Guide) – Sixth Edition, Project Management Institute Inc., 2017, Page(s) 266-268

Practice Standard for Earned Value Management - Second Edition, Project Management Institute Inc., 2011, Page(s) 38-39

https://www.project-management-prepcast.com/pmp-formulas

PMP Exam 4

Filtered Mode: Displaying 200 questions

Question 171 of 200
Question ID: 612916

You are running a project to manufacture high-precision engine sub-assemblies. Your project team is about to start internal quality testing which is planned to take at least two days. Your sponsor calls you and informs that she will be in the neighborhood tomorrow morning. She asked if it would be possible to inspect and sign off what you have completed so far.

What should be your response?

AError! Not a valid embedded object. Rush the testing to have the deliverables verified by tomorrow morning

BError! Not a valid embedded object. Accept the meeting request and prepare the required sign-off form

CError! Not a valid embedded object. Tell the sponsor to expect your call as soon as deliverables are verified

DError! Not a valid embedded object. Negotiate with the sponsor to waive quality requirements

Question answered incorrectly

Hint:
What is the required input for the sponsor to Validate Scope?

Correct Answer: C

Explanation:

According to the scenario, the team is about to start the Control Quality process to test the deliverables and confirm the deliverables are verified. The verified deliverables are an output from the Control Quality process and an input into the Validate Scope process where they become accepted deliverables after the customer or sponsor accepts them. The project team must first complete the Control Quality process in order for the sponsor to inspect and sign off on the deliverables as part of the Validate Scope process. Therefore, of the choices provided, telling the sponsor to expect your call as soon as deliverables are verified is the best answer to the question

asked.

Details for Each Option:

AError! Not a valid embedded object. Rush the testing to have the deliverables verified by tomorrow morning

> *Incorrect. Rushing testing reduces the time available to take corrective action if necessary and, therefore, may negatively affect the quality. Rushing testing just because the sponsor happens to be in the neighborhood is unlikely to be the best course of action.*

BError! Not a valid embedded object. Accept the meeting request and prepare the required sign-off form

> *Incorrect. This course of action does not respect the sponsor's time, which may be wasted if the deliverables have not been internally verified and do not meet acceptance criteria. You should be honest about the probability that the deliverables will not yet be ready for inspection until the originally scheduled time.*

CError! Not a valid embedded object. Tell the sponsor to expect your call as soon as deliverables are verified

> *Correct. Telling the sponsor to expect your call as soon as deliverables are verified is in the best interests of the project as it will give the team the time required to complete their testing and allow for corrective and/or preventive action if the deliverables do not meet the quality requirements.*

DError! Not a valid embedded object. Negotiate with the sponsor to waive quality requirements

> *Incorrect. Sponsors, clients, and other stakeholder authorities certainly have the option of waiving quality requirements. When they do so, part of the Validate Scope process is to update the requirements documentation to reflect the waiver. Such waivers are indeed common for discretionary dependencies. However, in machine manufacturing, undiscovered quality issues may result in expensive scrap. If you initiate a waiver of quality requirements just for the sake of convenience, it calls into question your commitment to quality, making this a poor course of action.*

Reference:

A Guide to the Project Management Body of Knowledge, (PMBOK® Guide) – Sixth Edition, Project Management Institute Inc., 2017, Page(s) 165, 167, 282-283, 305

PMP Exam 4

Filtered Mode: Displaying 200 questions

Question 172 of 200
Question ID: 612603

You are leading a project to build a new professional sports stadium, and you are in the process of implementing the stakeholder engagement plan. In order to ensure continued support of the project by the most influential stakeholders, you have arranged for a meet and greet with some of the professional athletes that will be playing in the new stadium.

What is the best way for you to determine which stakeholders to invite to the meet and greet?

AError! Not a valid embedded object. Research the lessons learned register

BError! Not a valid embedded object. Meet with the key stakeholders to determine which are the most influential

CError! Not a valid embedded object. Read the communications management plan

DError! Not a valid embedded object. Review the stakeholder register

Question answered incorrectly

Hint:
Where is the best place to find stakeholder classification information which will be useful in determining which stakeholders are the most influential and should be invited to the meet and greet?

Correct Answer: D

Explanation:

The question suggests that the Manage Stakeholder Engagement process is being carried out. The stakeholder register is one of the inputs to the Manage Stakeholder Engagement process and provides the list of project stakeholders and any information needed to execute the stakeholder engagement plan. The stakeholder register contains stakeholder classification information which will be useful in determining which stakeholders are the most influential and should be invited to the meet and greet. Of the available choices, only the stakeholder register provides stakeholder classifications, making it the best answer to the question asked.

Details for Each Option:

AError! Not a valid embedded object. Research the lessons learned register

Incorrect. It is not known from the question whether relevant information from earlier in the project has been captured in the lessons learned register. Regardless, the lessons learned register is not likely to have detailed information about stakeholder classifications to determine which stakeholders are the most influential and should be invited to the meet and greet.

BError! Not a valid embedded object. Meet with the key stakeholders to determine which are the most influential

Incorrect. Information about stakeholder classification is available in the stakeholder register. Meeting with the key stakeholders to determine which are the most influential may not result in the desired outcome. Additionally, this action is not the best use of the project manager's and the stakeholders' time when the requested information is readily available among the project documents.

CError! Not a valid embedded object. Read the communications management plan

Incorrect. The communications management plan describes the methods, formats, and technologies used for stakeholder communications. The communications management plan will be helpful in determining the communication methods to invite the stakeholders, but it does not provide stakeholder classification information to determine which stakeholders are most influential and should be invited to the meet and greet.

DError! Not a valid embedded object. Review the stakeholder register

Correct. The stakeholder register contains stakeholder classification information which will be useful in determining which stakeholders are the most influential and should be invited to the meet and greet.

Reference:

A Guide to the Project Management Body of Knowledge, (PMBOK® Guide) – Sixth Edition, Project Management Institute Inc., 2017, Page(s) 525, 514

PMP Exam 4

Filtered Mode: Displaying 200 questions

Question 173 of 200
Question ID: 612123

During project planning, a project manager allocates a dedicated team member to develop and distribute weekly project status reports to project stakeholders.

What project document should reflect this repetitive and time-consuming task?

AError! Not a valid embedded object. Project schedule

BError! Not a valid embedded object. Quality report

CError! Not a valid embedded object. Communications log

DError! Not a valid embedded object. Risk register

Question answered incorrectly

Hint:
Project document updates are often outputs from planning processes.

Correct Answer: A

Explanation:

The scenario implies that the project manager is developing the communications management plan which is the primary output of the Plan Communications Management process. Project document updates, such as the project schedule, are among the outputs of that process. According to the scenario, the project manager assigns a dedicated team member to develop and distribute the project status reports since this activity is expected to be recurring and likely time-consuming. The project schedule presents linked activities with planned dates, duration, milestones, and resources. This means the project schedule is the best place to document the repetitive task of the development and distribution of the weekly project status report.

Details for Each Option:

AError! Not a valid embedded object. Project schedule

Correct. The project schedule is a project document that presents linked activities with planned dates, duration, milestones, and resources. The project manager has assigned a dedicated team member to develop and issue status reports. The project manager should update the project schedule to reflect these communication activities.

BError! Not a valid embedded object. Quality report

Incorrect. The quality report is a project document that includes quality management issues, recommendations for corrective actions, and other information related to managing quality on a project. This document does not describe who and when develops and distributes weekly project status reports.

CError! Not a valid embedded object. Communications log

Incorrect. The 'communications log' is a made-up term.

DError! Not a valid embedded object. Risk register

Incorrect. The risk register is a repository in which the outputs of risk management processes are recorded. The scenario does not imply that the development and distribution of the weekly project status reports represent a risk to the project. Therefore, this repetitive task is unlikely to be documented in the risk register.

Reference:

A Guide to the Project Management Body of Knowledge, (PMBOK® Guide) – Sixth Edition, Project Management Institute Inc., 2017, Page(s) 378

PMP Exam 4

Filtered Mode: Displaying 200 questions

Question 174 of 200
Question ID: 613662

A 4-week project requires that its members work side-by-side. Two developers, a designer, and a specialist were to work every day for the first 2 weeks. Due to limited computers, only three can work simultaneously. You re-evaluate and see the need for developers for 4 weeks, the designer just for the 1st half and the specialist only for 2nd half of the project.

What is the best resource optimization technique to use to re-schedule the activities to accommodate three computers?

AError! Not a valid embedded object. Crashing

BError! Not a valid embedded object. Resource smoothing

CError! Not a valid embedded object. Fast tracking

DError! Not a valid embedded object. Schedule compression

Question answered incorrectly

Hint:
Only one answer choice represents a resource optimization technique. This technique adjusts activities of a schedule to fit predefined resource limits without changing the project completion date.

Correct Answer: B

Explanation:

Once you re-evaluated the tasks and determined the graphic designer is only needed in weeks 1 and 2, and the e-commerce specialist is only needed in weeks 3 and 4, you discover there is enough slack in the schedule to move the e-commerce specialist to begin work in week 3. This change would accommodate the three-computer constraint because you would have the two developers and the graphic designer on the three computers the first two weeks and the two developers and the e-commerce specialist on the three computers in last two weeks. The technique used to make these changes is called 'resource smoothing.' Resource smoothing is a resource optimization technique that adjusts activities of a schedule to fit predefined resource

limits without changing the completion date. In the scenario described, resource smoothing is the best answer to the question asked.

Details for Each Option:

AError! Not a valid embedded object. Crashing

Incorrect. Crashing is a schedule compression technique used to shorten project duration by adding additional resources. The problem in this scenario is not about duration, but about a limited resource (i.e., computers). You can eliminate crashing just because it is a schedule compression technique, not a resource optimization technique.

BError! Not a valid embedded object. Resource smoothing

Correct. Resource smoothing is a resource optimization technique that adjusts activities of a schedule to fit predefined resource limits without changing the completion date. The question implies there is a free float in the project schedule. Resource smoothing often uses float to rearrange activities. Therefore, of the choices provided, resource smoothing is the best answer to the question asked.

CError! Not a valid embedded object. Fast tracking

Incorrect. Fast tracking is a schedule compression technique where activities that were originally planned to be done sequentially are done in parallel for at least a portion of their duration. The scenario does not describe a situation where the schedule needs to be adjusted to meet a deadline. The problem described is with resource utilization. Also, since fast tracking is not a resource optimization technique, this answer choice can be eliminated.

DError! Not a valid embedded object. Schedule compression

Incorrect. Schedule compression techniques are used to shorten or accelerate the schedule duration without reducing scope to meet project objectives. Crashing and fast tracking are schedule compression techniques, both of which are incorrect answer choices.

Reference:

A Guide to the Project Management Body of Knowledge, (PMBOK® Guide) – Sixth Edition, Project Management Institute Inc., 2017, Page(s) 211, 215, 227

PMP Exam 4

Filtered Mode: Displaying 200 questions

Question 175 of 200
Question ID: 612442

A software development project is running behind schedule because the velocity of the project team has been slowed down by a higher than anticipated complexity of the technology used to develop the product. To bring the project back into alignment with its objectives, the project manager implements the planned response by fast tracking some of the testing activities.

What should the project manager do next?

AError! Not a valid embedded object. Update the schedule using the project management information system (PMIS)

BError! Not a valid embedded object. Submit a change request to update the schedule baseline to reflect the results of fast tracking

CError! Not a valid embedded object. Submit a change request to update the issue log with the final resolution

DError! Not a valid embedded object. Update the risk register to add the newly identified risk of higher than anticipated complexity

Question answered incorrectly

Hint:
What tool or technique might be used to modify the project schedule?

Correct Answer: A

Explanation:

The question implies that the Implement Risk Responses process is underway. Project management information systems (PMIS) are among the tools and techniques of this process. The PMIS can be used to update the project schedule to reflect changes resulting from fast tracking. PMIS can include schedule, resource, and cost software to ensure that agreed-upon risk response plans and their associated activities are integrated into the project alongside other project activities. The incorrect answer choices represent activities which have already been completed or are not likely to be necessary. Therefore, of the available choices, updating the

schedule using the project management information system (PMIS) is the next logical step for the project manager to take in this scenario.

Details for Each Option:

AError! Not a valid embedded object. Update the schedule using the project management information system (PMIS)

> *Correct. Project management information systems can include schedule, resource, and cost software to ensure that agreed-upon risk response plans and their associated activities are integrated into the project alongside other project activities.*

BError! Not a valid embedded object. Submit a change request to update the schedule baseline to reflect the results of fast tracking

> *Incorrect. An approved change request is required to update the schedule baseline. However, the question states that fast tracking is being used to bring the schedule back into alignment with the project objectives, which suggests that the schedule baseline will not be affected.*

CError! Not a valid embedded object. Submit a change request to update the issue log with the final resolution

> *Incorrect. The question does not state whether or not the issue was captured in the issue log. Assuming the issue was recorded in the issue log, it should be updated with the final resolution. However, an approved change request is not likely to be required to update the issue log. The project baselines and project management plan are typically placed in configuration control as defined by the configuration management plan. The issue log is a project document which is not likely to be placed under configuration control. Unless stated otherwise, it can be assumed that the issue log is not a controlled document and, therefore, does not require an approved change request to be modified.*

DError! Not a valid embedded object. Update the risk register to add the newly identified risk of higher than anticipated complexity

> *Incorrect. The question states that the project manager is implementing the agreed-upon response plan by fast tracking some of the product testing activities. A risk response plan cannot be implemented if the risk for which the response was planned was not previously identified. Therefore, the risk of higher than anticipated complexity must have already been identified earlier in the project.*

Reference:

A Guide to the Project Management Body of Knowledge, (PMBOK® Guide) – Sixth Edition,

Project Management Institute Inc., 2017, Page(s) 451

PMP Exam 4

Filtered Mode: Displaying 200 questions

Question 176 of 200
Question ID: 625215

You were hired to lead external implementation projects as well as internal operations projects. Knowing that the distinction between projects and operations is critical, you stress that difference to project staff and stakeholders in your first project meeting. You are asked by a stakeholder if there are any situations that operations and projects will intersect.

How should you respond to the stakeholder's question?

AError! Not a valid embedded object. Operations and projects never intersect.

BError! Not a valid embedded object. Operations and projects may intersect only at the closeout of the project.

CError! Not a valid embedded object. Operations and projects always intersect.

DError! Not a valid embedded object. Operations and projects may intersect at each closeout phase.

Question answered incorrectly

Hint:
Consider that there may be several iterations within a project that might require interaction between operations and projects.

Correct Answer: D

Explanation:

The *PMBOK® Guide* discusses the differences between projects and operations, defining operations as ongoing and a project as temporary. It also discusses the relationship between the two areas and its importance. The guide then lists several examples of when operations and projects may intersect. One example includes closeout phases.

Details for Each Option:

AError! Not a valid embedded object. Operations and projects never intersect.

Incorrect. The PMBOK® Guide discusses the differences between projects and operations, defining operations as ongoing and a project as temporary. Saying that operations and projects 'never' intersect would be inaccurate. The guide then lists several examples of when operations and projects may intersect. Beware of absolute statements such as, 'never', 'always', etc.

BError! Not a valid embedded object. Operations and projects may intersect only at the closeout of the project.

Incorrect. It is true that the closeout of the project can be one of the various points that operations and projects intersect. However, saying that this happens 'only' at the closeout would be inaccurate. The guide suggests that each closeout phase can be an intersect point, not 'only' the close of the entire project.

CError! Not a valid embedded object. Operations and projects always intersect.

Incorrect. The PMBOK® Guide discusses the differences between projects and operations, defining operations as ongoing and a project as temporary. The guide then lists several examples of when operations and projects may intersect. But it does not mean they 'always' intersect. Beware of absolute statements such as, 'never', 'always', etc.

DError! Not a valid embedded object. Operations and projects may intersect at each closeout phase.

Correct. The guide suggests that each closeout phase can be a point that operations and projects intersect which makes this choice the best answer to the question asked.

Reference:

A Guide to the Project Management Body of Knowledge, (PMBOK® Guide) – Sixth Edition, Project Management Institute Inc., 2017, Page(s) 16

PMP Exam 4

Filtered Mode: Displaying 200 questions

Question 177 of 200
Question ID: 613222

A project manager is about to close a project that missed its performance goals. The project manager is gathering the information that is most pertinent to the project's poor performance.

Which of the following is least likely to help in this task?

AError! Not a valid embedded object. Risk report

BError! Not a valid embedded object. Project team assignments

CError! Not a valid embedded object. Assumption log

DError! Not a valid embedded object. Change log

Question answered incorrectly

Hint:
Which answer choice is not typically used as an input into the Close Project or Phase process.

Correct Answer: B

Explanation:

Project team assignments document the team members and their roles and responsibilities for the project. Documentation can include a project team directory and names inserted into the project management plan, such as the project organization charts and schedules. Project team assignments are not typically used as an input into the Close Project or Phase process. Although there may be circumstances where the project team assignments might be helpful, it is the least likely to be used compared to the other choices. The risk report, assumption log, and change log are likely to have valuable information on aspects of the project that were problematic. Since the question is asking for the item that would be 'least' likely to be used for the closing process, project team assignments represent the best response.

Details for Each Option:

AError! Not a valid embedded object. Risk report

Incorrect. The risk report provides information on the risk status and is used to check that there are no open risks at the end of the project. The risk report might provide insight into any false perceptions of overall project risk.

BError! Not a valid embedded object. Project team assignments

Correct. Project team assignments are not typically used as inputs to the Close Project or Phase process, and although there might be cases where it could help, it is least likely compared to the other choices.

CError! Not a valid embedded object. Assumption log

Incorrect. The assumption log has a record of all the assumptions and constraints that guided the technical specifications, estimates, schedule, risks, etc. For example, the assumption log might provide valuable information on assumptions that were proved to be false.

DError! Not a valid embedded object. Change log

Incorrect. The change log contains the status of all change requests throughout the project. The change log may provide insight into how changes negatively affected the project.

Reference:

A Guide to the Project Management Body of Knowledge, (PMBOK® Guide) – Sixth Edition, Project Management Institute Inc., 2017, Page(s) 124

PMP Exam 4

Filtered Mode: Displaying 200 questions

Question 178 of 200
Question ID: 612017

To mitigate recent labor issues and reduce their risk in the future, senior executives are considering alternatives for automating production. One executive is not in favor of using automation at all; a second executive suggests adding some basic automation, while another is in favor of automating the entire production line.

Which of the following is the least likely option to be included in the business case?

AError! Not a valid embedded object. Do nothing

BError! Not a valid embedded object. Do less than the minimum work possible to address the problem

CError! Not a valid embedded object. Do more than the minimum work possible to address the problem

DError! Not a valid embedded object. Do the minimum work possible to address the problem

Question answered incorrectly

Hint:
Which option makes the least sense from a business perspective?

Correct Answer: B

Explanation:

A business case should include a set of options to be considered for addressing the business problem or opportunity. Options are alternative courses of action that may be taken by the organization. Doing less than the minimum work possible to address the problem makes the least sense from a business perspective. Taking this option means that the company would expend company resources without receiving the benefits of the project. Why would the company authorize a project that does not produce the intended benefits?

Details for Each Option:

AError! Not a valid embedded object. Do nothing

Incorrect. Selecting this option results in the project not being authorized. This option is also referred to as the "business as usual" option. Declining to authorize a desired or optional project is always a possibility.

BError! Not a valid embedded object. Do less than the minimum work possible to address the problem

Correct. Doing less than the minimum work possible to address the problem makes the least sense from a business perspective. Taking this option means that the company would expend company resources without receiving the benefits of the project. Why would the company authorize a project that does not produce the intended benefits?

CError! Not a valid embedded object. Do more than the minimum work possible to address the problem

Incorrect. This option meets the minimum set of criteria and some or all of the other documented criteria. For example, in the scenario, perhaps the company would authorize the project to replace the entire production line with a new automated system rather than just retrofit the existing production line.

DError! Not a valid embedded object. Do the minimum work possible to address the problem

Incorrect. The minimum work possible meets the minimum set of criteria for the project. For this scenario, that might mean retrofitting the existing production line to incorporate automation.

Reference:

A Guide to the Project Management Body of Knowledge, (PMBOK® Guide) – Sixth Edition, Project Management Institute Inc., 2017, Page(s) 31

PMP Exam 4

Filtered Mode: Displaying 200 questions

Question 179 of 200
Question ID: 612409

A project manager has completed the project management plan which has just been reviewed and approved by the project sponsor and others. The project manager now needs to communicate the start of the project along with key milestones, and other relevant information to inform the stakeholders and gain commitment.

What is the best way to accomplish these objectives?

AError! Not a valid embedded object. Provide copies of the project management plan

BError! Not a valid embedded object. Email the milestone schedule

CError! Not a valid embedded object. Share the project charter on the company internal website

DError! Not a valid embedded object. Conduct a meeting

Question answered incorrectly

Hint:
Review of the planning domain of the Project Management Professional (PMP)® Examination Content Outline will be helpful in correctly answering this question.

Correct Answer: D

Explanation:

The Project Management Professional (PMP)® Examination Content Outline contains a list of tasks for each domain, with which PMP aspirants are expected to be familiar. Task #12 of the planning domain of the Project Management Professional (PMP)® Examination Content Outline states, "Conduct kick-off meeting, communicating the start of the project, key milestones, and other relevant information in order to inform and engage stakeholders and gain commitment." Therefore, of the choices given, conducting a meeting is the best answer to the question asked.

Details for Each Option:

AError! Not a valid embedded object. Provide copies of the project management plan

> *Incorrect. Providing the project management plan suggests one-way communication. Interactive communication is a more effective method of gaining the commitment of key stakeholders as it will allow the stakeholders to ask questions and have their concerns addressed.*

BError! Not a valid embedded object. Email the milestone schedule

> *Incorrect. A milestone schedule is a type of schedule that presents milestones with planned dates. While the milestone schedule will have key milestones, it does not contain other relevant information nor is it the appropriate method of communicating the start of a project or gaining commitment from the stakeholders.*

CError! Not a valid embedded object. Share the project charter on the company internal website

> *Incorrect. The project charter contains some high-level information regarding the project. However, sharing the project charter does not allow for interaction with the stakeholders, and is therefore not the best way to gain commitment from the stakeholders, making this an incorrect response.*

DError! Not a valid embedded object. Conduct a meeting

> *Correct. Task #12 of the planning domain of the Project Management Professional (PMP)® Examination Content Outline states, "Conduct kick-off meeting, communicating the start of the project, key milestones, and other relevant information in order to inform and engage stakeholders and gain commitment." Conducting a kick-off meeting would be a better answer; however, this choice is not provided. Therefore, of the available options, conducting a meeting, implying the kick-off meeting, is the best answer.*

Reference:

A Guide to the Project Management Body of Knowledge, (PMBOK® Guide) – Sixth Edition, Project Management Institute Inc., 2017, Page(s) 86; see also Project Management Professional (PMP)® Examination Content Outline, Project Management Institute Inc., June 2015, Domain 2, Task 12

PMP Exam 4

Filtered Mode: Displaying 200 questions

Question 180 of 200
Question ID: 612948

A key project deliverable has been outsourced to a vendor. The vendor delivered on contract, and the project manager has completed all activities associated with the Control Procurements process.

What should the project manager do next?

AError! Not a valid embedded object. Pay the vendor's invoice

BError! Not a valid embedded object. Approve the deliverable received from the vendor

CError! Not a valid embedded object. Conduct an audit

DError! Not a valid embedded object. Measure stakeholder satisfaction

Question answered incorrectly

Hint:
After procurements are closed, the process of administrative closure of the project should begin. What activity is part of this process?

Correct Answer: D

Explanation:

According to the scenario, the Control Procurements process has already been completed. Three of the four answer choices represent activities, which are typically performed during the Control Procurements process and, therefore, can be eliminated. Measuring stakeholder satisfaction is part of the Close Project or Phase process. Therefore, of the choices provided, after completing the activities associated with the Control Procurements process, measuring stakeholder satisfaction is what the project manager should do next.

Details for Each Option:

AError! Not a valid embedded object. Pay the vendor's invoice

Incorrect. Paying vendor invoices is part of the Control Procurements process which is, according to the scenario described, has already been completed.

BError! Not a valid embedded object. Approve the deliverable received from the vendor

Incorrect. According to the scenario described, the project manager has completed the Control Procurements process. Therefore, deliverables received from the vendor should have already been approved.

CError! Not a valid embedded object. Conduct an audit

Incorrect. A procurement audit is a structured review of the procurement process. An audit is one of the tools and techniques used in the Control Procurement process which is, according to the scenario described, has already been completed.

DError! Not a valid embedded object. Measure stakeholder satisfaction

Correct. One of the activities necessary for the administrative closure of the project or phase includes measuring stakeholder satisfaction. Stakeholders' feedback can lead to improved processes and procedures for future projects. Of the available choices, only measuring stakeholder satisfaction is the next logical step in this situation.

Reference:

A Guide to the Project Management Body of Knowledge, (PMBOK® Guide) – Sixth Edition, Project Management Institute Inc., 2017, Page(s) 499, 123

PMP Exam 4

Filtered Mode: Displaying 200 questions

Question 181 of 200
Question ID: 613601

A construction company which is very experienced with building apartments has been contracted to build a strip mall which is a relatively new type of project for the organization. The project is now concluded, and the project team has documented a significant amount of new knowledge gained throughout the project.

Where would a project manager find this information when planning their future similar project?

AError! Not a valid embedded object. Lessons learned repository

BError! Not a valid embedded object. Project knowledge register

CError! Not a valid embedded object. Lessons learned register

DError! Not a valid embedded object. Project management body of knowledge

Question answered incorrectly

Hint:
Where is knowledge gained during a project transferred at the end of a project?

Correct Answer: A

Explanation:

The lessons learned register is an output of the Manage Project Knowledge process. It is then used as an input and updated as an output in many processes throughout the project. The knowledge gained throughout the project can then be used to improve performance for the current project. At the end of the project or phase, the information is transferred to an organizational process asset called a lessons learned repository for use in future projects. A future project manager working on a subsequent project can access the knowledge gained on past projects from the lessons learned repository.

Details for Each Option:

AError! Not a valid embedded object. Lessons learned repository

Correct. Lessons learned and knowledge gained throughout a project are transferred to the lessons learned repository at the end of a project or phase for use in future projects.

BError! Not a valid embedded object. Project knowledge register

Incorrect. 'Project knowledge register' is a fake term made up for this question.

CError! Not a valid embedded object. Lessons learned register

Incorrect. Lessons learned register is a project document used to record knowledge gained during a project so that it can be used in the current project. At the end of the project or phase, the information is transferred to an organizational process asset called a lessons learned repository for use in future projects.

DError! Not a valid embedded object. Project management body of knowledge

Incorrect. Project management body of knowledge is a term that describes the knowledge within the profession of project management. It has nothing to do with the repository of knowledge gained throughout project execution.

Reference:

A Guide to the Project Management Body of Knowledge, (PMBOK® Guide) – Sixth Edition, Project Management Institute Inc., 2017, Page(s) 104, 128

PMP Exam 4

Filtered Mode: Displaying 200 questions

Question 182 of 200
Question ID: 612261

You have been hired midway into project execution to replace the previous project manager. The project is in disarray: discussions on changes frequently become shouting matches between the project team members, no one seems to take responsibility, and the project management plan is incomplete. As a result, the project is far behind schedule.

What is your best course of action?

AError! Not a valid embedded object. Use management reserves to cover for the lost time

BError! Not a valid embedded object. Seek help from the project management office (PMO)

CError! Not a valid embedded object. Fire the project team members and outsource the work

DError! Not a valid embedded object. Revise the project management plan and have it approved

Question answered incorrectly

Hint:
What is the most likely reason for the changes to trigger such heated discussions?

Correct Answer: D

Explanation:

The scenario describes a project in execution after the initial project manager leaves. Since the project management plan is incomplete, and discussions on changes to deliverables frequently become shouting matches between the project team members, it is reasonable to assume that the change management plan is the main cause of the flawed or even missing change control process on the project. Reviewing the project management plan, specifically the change management plan, and making necessary modifications to ensure changes are properly managed on the project from now on is essential for the project to proceed.

Details for Each Option:

AError! Not a valid embedded object. Use management reserves to cover for the lost time

Incorrect. Management reserves are part of the overall project budget allocated to cover the unforeseen risks that can affect a project. While the situation described in the scenario can be considered an unforeseen risk, using management reserves without addressing the root cause of the problem is unlikely to be your best course of action.

BError! Not a valid embedded object. Seek help from the project management office (PMO)

Incorrect. The PMO is an organizational structure that standardizes the project-related governance processes and facilitates the sharing of resources, methodologies, tools, and techniques. Depending on its type (supportive, controlling, directive), the PMO may provide guidance and help you in the situation described in the scenario. However, another choice represents a better answer to the question.

CError! Not a valid embedded object. Fire the project team members and outsource the work

Incorrect. There is not enough information in the question to determine that the team is the source of the problems the project has been experiencing so far. Therefore, without proper investigation, firing the team would be an overreaction.

DError! Not a valid embedded object. Revise the project management plan and have it approved

Correct. To manage the project, it is vital for you, as a project manager, to have a complete and approved project management plan.

Reference:

A Guide to the Project Management Body of Knowledge, (PMBOK® Guide) – Sixth Edition, Project Management Institute Inc., 2017, Page(s) 116

PMP Exam 4

Filtered Mode: Displaying 200 questions

Question 183 of 200
Question ID: 613615

A project manager is leading a project and is currently preparing the project planning documents. In support of this process, the project manager must gather information to determine how work will be executed to accomplish the project objectives.

What is the best way for the project manager to perform this task?

AError! Not a valid embedded object. Review the project charter

BError! Not a valid embedded object. Schedule a bidder conference

CError! Not a valid embedded object. Schedule a meeting with the appropriate stakeholders

DError! Not a valid embedded object. Consult the project management plan

Question answered incorrectly

Hint:
What is the best way for the project manager to gather information from key stakeholders?

Correct Answer: C

Explanation:

The question implies the project manager is conducting the Develop Project Management Plan process. One of the tools and techniques associated with the Develop Project Management Plan process is the use of meetings. Meetings may be used to discuss the project approach, determine how work will be executed to accomplish the project objectives and establish the way the project will be monitored and controlled. Of the answer choices provided, gathering the appropriate stakeholders together for a meeting is the best way for the project manager to perform the task at hand.

Details for Each Option:

AError! Not a valid embedded object. Review the project charter

Incorrect. The project charter contains high-level information about the project but does not provide the level of detail required to determine how the work will be executed.

BError! Not a valid embedded object. Schedule a bidder conference

Incorrect. Bidder conferences are used during the Conduct Procurements process as opposed to the Develop Project Management Plan which, based on the information provided in the question, is the process the project manager is performing.

CError! Not a valid embedded object. Schedule a meeting with the appropriate stakeholders

Correct. The question implies the project manager is conducting the Develop Project Management Plan process. For this process, meetings are used to discuss the project approach, determine how work will be executed to accomplish the project objectives and establish the way the project will be monitored and controlled.

DError! Not a valid embedded object. Consult the project management plan

Incorrect. The question implies that the Develop Project Management Plan process is underway, suggesting that the project management plan is not ready yet and, therefore, cannot be used as a resource.

Reference:

A Guide to the Project Management Body of Knowledge, (PMBOK® Guide) – Sixth Edition, Project Management Institute Inc., 2017, Page(s) 86

PMP Exam 4

Filtered Mode: Displaying 200 questions

Question 184 of 200
Question ID: 612353

You are developing the project management plan for your current project. You want to know if there is any relevant information from past projects that can help you with your task.

What should you do?

AError! Not a valid embedded object. Review the lessons learned register

BError! Not a valid embedded object. Research the organizational process assets

CError! Not a valid embedded object. Meet with a project manager who managed similar past projects

DError! Not a valid embedded object. Check the enterprise environmental factors for lessons learned from past projects

Question answered incorrectly

Hint:
Where might you find lessons learned from past projects?

Correct Answer: B

Explanation:

The question is asking where to find information on lessons learned from past projects. The lessons learned repository is an organizational process asset which serves as a store of historical information about lessons learned from past projects. Therefore, researching the organizational process assets is the best answer to the question asked.

Details for Each Option:

AError! Not a valid embedded object. Review the lessons learned register

Incorrect. The lessons learned register is a source for information on the 'current' project,

while the question states that you want to know if there is any relevant information from 'past' projects. Information on past projects is contained in the lessons learned repository rather than the lessons learned register.

BError! Not a valid embedded object. Research the organizational process assets

Correct. The lessons learned repository is an organizational process asset which serves as a store of historical information about lessons learned from past projects. Therefore, researching the organizational process assets is the best answer to the question asked.

CError! Not a valid embedded object. Meet with a project manager who managed similar past projects

Incorrect. While the project manager of similar past projects may have some relevant information, this information reflects only one opinion. Checking the organizational process assets is a better answer choice because the lessons learned repository is more likely to have complete and accurate information reflecting the views of all project team members. Therefore, this answer choice can be eliminated.

DError! Not a valid embedded object. Check the enterprise environmental factors for lessons learned from past projects

Incorrect. The lessons learned repository is an organizational process asset and not an enterprise environmental factor. The enterprise environmental factors are not a source of information on past projects, making this choice an incorrect response.

Reference:

A Guide to the Project Management Body of Knowledge, (PMBOK® Guide) – Sixth Edition, Project Management Institute Inc., 2017, Page(s) 84

PMP Exam 4

Filtered Mode: Displaying 200 questions

Question 185 of 200
Question ID: 613226

A project is completing late and over budget. There were no major issues, quality problems, or changes, and only a few of the risks needed response actions. The project manager is trying to determine what has caused the problem.

Which of the following is most likely to point to the root cause?

AError! Not a valid embedded object. Milestone list

BError! Not a valid embedded object. Change log

CError! Not a valid embedded object. Basis of estimates

DError! Not a valid embedded object. Quality reports

Question answered incorrectly

Hint:
The root cause of the problem most likely occurred in an early part of the project.

Correct Answer: C

Explanation:

The basis of estimates contains supporting documentation outlining the details used in establishing project estimates such as assumptions, constraints, level of detail, ranges, and confidence levels. The basis of estimates is used as an input to the Close Project or Phase process implied by the scenario to evaluate how the estimation of durations, cost, resources, and cost control compared to the actual results. Sometimes, selecting the correct answer requires the prospective PMP aspirants to use the process of elimination of the worst answer choices. According to the scenario, the project did not encounter any major issues, quality problems, or changes, and only a few risks have realized necessitating the implementation of the response plans. This information may help eliminate the answer choices related to the scope, schedule, cost, quality, risks, etc., leaving the basis of estimates as not ideal but the only plausible answer choice.

Details for Each Option:

AError! Not a valid embedded object. Milestone list

Incorrect. The milestone list indicates might indicate 'when' key milestones were missed but would not likely indicate 'why' they were missed.

BError! Not a valid embedded object. Change log

Incorrect. The change log contains a comprehensive list of changes submitted during the project and their current status. The question states that there were no major changes to the project. Additionally, if scope creep occurred, the change log would not be helpful, since scope creep is uncontrolled and if the change were logged, the change would have likely been controlled.

CError! Not a valid embedded object. Basis of estimates

Correct. Since the project did not encounter any major issues and the few realized risks were addressed with response plans, it is likely that the cost and schedule estimates were flawed. The basis of estimates may be helpful in identifying the issues with the estimates.

DError! Not a valid embedded object. Quality reports

Incorrect. The question states that there were no major quality issues encountered during the project. Therefore, the quality reports are not likely to provide useful information to identify the reason the project failed to meet its objectives.

Reference:

A Guide to the Project Management Body of Knowledge, (PMBOK® Guide) – Sixth Edition, Project Management Institute Inc., 2017, Page(s) 124

PMP Exam 4

Filtered Mode: Displaying 200 questions

Question 186 of 200
Question ID: 625211

One of your project team members, who was responsible for several key deliverables, has suddenly left the company. You overhear a heated debate among the team members over what to do next. It sounds as if the team is split - half want to hire a new team member; the other half want to contract out the work. As the project manager, you want to resolve this conflict in a way that solves the problem and keeps the team unified.

Which of the following approaches should you take?

AError! Not a valid embedded object. Tell the team that you are in charge and will take disciplinary action if a consensus is not reached

BError! Not a valid embedded object. Agree with the team that a resource is needed, and urge one side to back down for the sake of agreement

CError! Not a valid embedded object. Ask the team members to find a compromise that would be acceptable to both sides

DError! Not a valid embedded object. Request that the team researches different options, presents ideas, and works out a solution

Question answered incorrectly

Hint:
Which conflict management approach is considered a win-win conflict resolution technique?

Correct Answer: D

Explanation:

PMI prefers problem solving and collaboration when it comes to resolving issues or conflicts, as it is a win-win conflict resolution technique that typically leads to greater buy-in and the most lasting solution. The 'collaborate/problem solve' approach emphasizes open dialogue, cooperation, and incorporating multiple viewpoints to find the best outcome for the project. In this scenario, the project manager sends the project team on a fact-finding mission, which is a good way to help the team discuss the issue more objectively. Getting the team together in a

problem-solving session to present their ideas and work out a solution is more likely to satisfy both sides and keep the team unified; therefore, the 'Collaborate/Problem Solve' approach is the 'best' answer choice. All other approaches are temporary solutions resulting in recurring conflicts.

Details for Each Option:

AError! Not a valid embedded object. Tell the team that you are in charge and will take disciplinary action if a consensus is not reached

> *Incorrect. This is an example of the 'Force/Direct' approach to resolving a conflict. Forcing a solution on the team is a win-lose scenario and will likely divide the team rather than unite it. Disciplinary actions are not warranted at this stage since project team members are entitled to have differences of opinion, which when managed properly can result in greater productivity and positive working relationships. If project team members cannot resolve a conflict situation on their own, a project manager should help facilitate a satisfactory resolution before taking disciplinary action.*

BError! Not a valid embedded object. Agree with the team that a resource is needed, and urge one side to back down for the sake of agreement

> *Incorrect. This is an example of the 'Smooth/Accommodate' approach to conflict resolution. Emphasizing areas of agreement between warring sides can help diffuse conflict situations but leave the real issue buried. Urging one side to back down simply to maintain the peace puts maintaining harmony within the group above finding the best solution to the problem. This approach is not very satisfying and could lead to breakdowns in trust.*

CError! Not a valid embedded object. Ask the team members to find a compromise that would be acceptable to both sides

> *Incorrect. This sounds like a nice answer, but 'Compromise/Reconcile' is a lose-lose conflict resolution technique because each side has to give up something to reach a solution, meaning that no one gets what they wanted. This only partially or temporarily resolves the conflict and therefore is not the best choice.*

DError! Not a valid embedded object. Request that the team researches different options, presents ideas, and works out a solution

> *Correct. This 'Collaborate/Problem Solve' approach allows the team to gather facts to help them make an objective decision and work collaboratively to work out a solution. Collaboration and problem solving are the best ways to resolve conflict as they are likely to produce a win-win result.*

Reference:

A Guide to the Project Management Body of Knowledge, (PMBOK® Guide) – Sixth Edition, Project Management Institute Inc., 2017, Page(s) 349

PMP Exam 4

Filtered Mode: Displaying 200 questions

Question 187 of 200
Question ID: 613612

As the project manager, you are in the process of assisting the project sponsor with creating the project charter for a project which will design and launch a new social media platform. In order to create the project charter, you need to get a better understanding of the project's objectives.

What should you do to obtain this information?

AError! Not a valid embedded object. Consult the project management plan

BError! Not a valid embedded object. Review the assumption log

CError! Not a valid embedded object. Check the project needs analysis documents

DError! Not a valid embedded object. Review the business case and benefits management plan

Question answered incorrectly

Hint:
Which documents serve as an input to the Develop Project Charter process and are sources of information about the project's objectives and how the project will contribute to the business goals?

Correct Answer: D

Explanation:

The question suggests that the Develop Project Charter process is underway. Business documents including the business case and the benefits management plan serve as an input to the Develop Project Charter process. These business documents are sources of information about the project's objectives and how the project will contribute to the business goals. Therefore, to get a better understanding of the project's objectives, you should review the business case and benefits management plan.

Details for Each Option:

AError! Not a valid embedded object. Consult the project management plan

Incorrect. The question implies that the Develop Project Charter process is being carried out. The project management plan is created after the project charter is developed. Therefore, the project management plan is not available at that point nor does it contain information about the project's objectives.

BError! Not a valid embedded object. Review the assumption log

Incorrect. The assumption log contains assumptions and constraints identified throughout the project life cycle. This document does not contain information about the project's objectives.

CError! Not a valid embedded object. Check the project needs analysis documents

Incorrect. 'Project needs analysis documents' is a fake term made up for this question.

DError! Not a valid embedded object. Review the business case and benefits management plan

Correct. Business documents including the business case and the benefits management plan are sources of information about the project's objectives and how the project will contribute to the business goals.

Reference:

A Guide to the Project Management Body of Knowledge, (PMBOK® Guide) – Sixth Edition, Project Management Institute Inc., 2017, Page(s) 77; see also https://www.pmi.org/-/media/pmi/documents/public/pdf/learning/thought-leadership/benefits-realization-management-framework.pdf

---

PMP Exam 4

Filtered Mode: Displaying 200 questions

Question 188 of 200
Question ID: 610065

A project manager is in the process of developing the stakeholder register. As the first step in this process, she needs to create a list of potential stakeholders and decides to use a data gathering technique called brain writing.

What is the first thing to do when using that technique?

AError! Not a valid embedded object. Convene a data gathering meeting with the participants

BError! Not a valid embedded object. Develop your own template for a stakeholder register

CError! Not a valid embedded object. Send a list of questions to participants before the creativity session

DError! Not a valid embedded object. Consult the stakeholder management plan to understand how the stakeholders are to be identified

Question answered incorrectly

Hint:
What differentiates brain writing from a traditional brainstorming session?

Correct Answer: C

Explanation:

Data gathering techniques that can be used for the Identify Stakeholders process include questionnaires and surveys, brainstorming, and brain writing. Brain writing is a refinement of brainstorming that allows individual participants time to consider the questions individually before the group creativity session is held. Therefore, the first step of brain writing is providing the participants with the questions before the creativity session. This process will allow the participants to be better prepared which will make the meeting more effective than a traditional brainstorming session.

Details for Each Option:

AError! Not a valid embedded object. Convene a data gathering meeting with the participants

> *Incorrect. Brain writing is a data gathering technique where participants are allowed time to consider the questions individually before the brainstorming session. Therefore, the project manager needs to provide the participants with the questions before convening the data gathering meeting.*

BError! Not a valid embedded object. Develop your own template for a stakeholder register

> *Incorrect. The project manager would need a template for the stakeholder register upon starting the process of identifying stakeholders. However, she is not likely to develop her own template. The project manager should first check the organizational process assets for an approved version of the stakeholder register template. Therefore, this answer choice can be eliminated.*

CError! Not a valid embedded object. Send a list of questions to participants before the creativity session

> *Correct. Brain writing is a refinement of brainstorming that allows individual participants time to consider the questions individually before the group creativity session is held. Therefore, the first step of brain writing is providing the participants with the questions before the creativity session.*

DError! Not a valid embedded object. Consult the stakeholder management plan to understand how the stakeholders are to be identified

> *Incorrect. The question states that the project manager is in the process of creating the stakeholder register. The stakeholder register is developed during the first iteration of the Identify Stakeholders process. Therefore, the stakeholder management plan, as a component of the project management plan, does not yet exist, making this option an incorrect response.*

Reference:

A Guide to the Project Management Body of Knowledge, (PMBOK® Guide) – Sixth Edition, Project Management Institute Inc., 2017, Page(s) 511

PMP Exam 4

Filtered Mode: Displaying 200 questions

Question 189 of 200
Question ID: 612498

A project manager is leading a project to develop a prototype diesel engine. One problem that was identified and documented was the corrosion of engine parts which were stored in an offsite storage facility. The parts were refinished and coated with a penetrant to inhibit corrosion in the future. The project manager is confident that these measures will solve the problem.

With respect to tools and techniques, what else should the project manager do in this situation?

AError! Not a valid embedded object. Perform an alternative analysis

BError! Not a valid embedded object. Update the lessons learned register

CError! Not a valid embedded object. Revise the issue log

DError! Not a valid embedded object. Determine if the problem has been resolved

Question answered incorrectly

Hint:
What else should be done in this scenario with respect to problem solving?

Correct Answer: D

Explanation:

The question describes a situation where a problem occurred on the project, and measures were taken to resolve the issue suggesting that problem solving was used in this case. Problem solving may use a set of tools that helps the project manager to solve problems that arise during Control Resources, the process implied by the scenario. Although the question states that the project manager is confident that the steps taken will solve the problem, there is no way to determine the effectiveness of the solution at this point. The solution should be checked to ensure that the problem has been indeed fixed. In this case, that might involve periodically inspecting the parts and reapplying the penetrant as necessary. The final step of the problem solving process is to check the solution which is all that remains to be completed in this scenario with respect to tools and techniques. The incorrect answer choices represent actions that do not involve tools and

techniques or have already been completed.

Details for Each Option:

AError! Not a valid embedded object. Perform an alternative analysis

Incorrect. An alternative analysis is a technique used to evaluate identified options in order to select the options or approaches to use to execute and perform the work of the project. Although not stated in the question, it is reasonable to assume that an alternative analysis may have been performed to decide between repairing or replacing the damaged parts. The question states that the affected parts were refinished indicating that the decision has already been made and corrective actions were taken. Therefore, even if the alternative analysis was not performed in this scenario, performing it now has little value since the action to address the issue has already been taken.

BError! Not a valid embedded object. Update the lessons learned register

Incorrect. The lessons learned register is a project document used to record knowledge gained during a project so that it can be used in the current project and entered into the lessons learned repository. Although the lessons learned register should be updated in this situation, the question is asking about tools and techniques, whereas the lessons learned register is a project document, making this choice an incorrect answer.

CError! Not a valid embedded object. Revise the issue log

Incorrect. The issue log is a project document where information about issues is recorded and monitored. While the issue log should be updated with the details regarding this problem, the issue log is a project document and not a tool or technique as asked by the question.

DError! Not a valid embedded object. Determine if the problem has been resolved

Correct. Although the question states that the project manager is confident that the steps taken will solve the problem, there is no way to determine the effectiveness of the solution at this point. As the final step in the problem solving process, the solution should be checked to ensure that the problem has been fixed.

Reference:

A Guide to the Project Management Body of Knowledge, (PMBOK® Guide) – Sixth Edition, Project Management Institute Inc., 2017, Page(s) 356, 358

PMP Exam 4

Filtered Mode: Displaying 200 questions

Question 190 of 200
Question ID: 612642

A project manager is leading a project which has experienced numerous quality issues. These issues threaten the successful completion of the project objectives. In order to improve the performance of the project, the project manager schedules a retrospective with the project team and relevant stakeholders.

Which of the following topics is least likely to be discussed?

AError! Not a valid embedded object. What to incorporate into the ongoing project and what to include in future projects

BError! Not a valid embedded object. What are the project objectives and the roles and responsibilities of the stakeholders

CError! Not a valid embedded object. What elements of the project have gone well and what could be improved upon

DError! Not a valid embedded object. What should be added to the organizational process assets (OPAs)

Question answered incorrectly

Hint:
Which answer choice represents a topic more appropriately discussed during the project kick-off meeting?

Correct Answer: B

Explanation:

The question suggests that the Control Quality is being performed, and a retrospective, among the tools and techniques used in this process, is being held to determine how to address the quality issues that have been encountered during the project. A retrospective is a scheduled review to record lessons learned which can then be documented in the lessons learned register to improve the future performance of the project. Appropriate topics of discussion for the retrospective would be successful elements of the project, what could be improved, what to incorporate in the ongoing project and what to include in future projects, and what to add to the

organizational process assets.

The purpose of a project kick-off meeting is to communicate the objectives of the project, gain the commitment of the team for the project, and explain the roles and responsibilities of each stakeholder. Note, the question is asking which answer choice represents a topic that is 'least' likely to be discussed. Therefore, of the available choices, the objectives of the project and the roles and responsibilities of each stakeholder are 'least' likely to be discussed in this scenario.

Details for Each Option:

AError! Not a valid embedded object. What to incorporate into the ongoing project and what to include in future projects

> *Incorrect. During the retrospective, many suggestions may be made to address the quality issues faced during the project. Some of the suggestions may not be relevant or actionable. A discussion of what to incorporate into the project will be vital to addressing the quality issues.*

BError! Not a valid embedded object. What are the project objectives and the roles and responsibilities of the stakeholders

> *Correct. The purpose of a project kick-off meeting is to communicate the objectives of the project, gain the commitment of the team for the project, and explain the roles and responsibilities of each stakeholder. This answer choice best represents the project kick-off meeting rather than a retrospective and is, therefore, the best answer to the question asked.*

CError! Not a valid embedded object. What elements of the project have gone well and what could be improved upon

> *Incorrect. The project team will want to discuss what has gone well thus far on the project and what could be improved upon to address the quality issues for the project. This information will be a source of best practices which can be documented in the lessons learned register for use later in the project. Identifying the problem areas can lead to a productive discussion about what specific actions can be taken to improve quality for the project going forward.*

DError! Not a valid embedded object. What should be added to the organizational process assets (OPAs)

> *Incorrect. OPAs are the plans, processes, policies, procedures, and knowledge bases specific to and used by the performing organization. While updates to the OPAs are not explicitly specified as an output from the Control Quality process implied by the question, the retrospective meeting can result in suggestions of how the OPAs should be updated.*

Reference:

A Guide to the Project Management Body of Knowledge, (PMBOK® Guide) – Sixth Edition, Project Management Institute Inc., 2017, Page(s) 86, 305

PMP Exam 4

Filtered Mode: Displaying 200 questions

Question 191 of 200
Question ID: 612502

A vendor on your project informs you that they will be unable to perform the work as contracted after some equipment required for the project was destroyed in a hurricane. The vendor cites a clause in the contract that is designed to address the inability of a party to execute their responsibilities due to extraordinary factors that were outside the control of the party?

What clause does the vendor refer to?

AError! Not a valid embedded object. Arbitration

BError! Not a valid embedded object. Force majeure

CError! Not a valid embedded object. No-contest

DError! Not a valid embedded object. Termination

Question answered incorrectly

Hint:
The correct answer is also referred to as an act of God clause.

Correct Answer: B

Explanation:

A force majeure clause is a common contractual clause that frees parties, bound by a contract, from liability or obligation when certain circumstances beyond their control arise making performance impossible. Examples of force majeure may include war, riot, strikes, flooding, tornado, hurricanes, etc. The scenario describes a hurricane as destroying the equipment needed to execute the project, which is an example of a force majeure. While the topic of this question is not included in the *PMBOK® Guide*, the Project Management Professional (PMP)® Examination Content Outline, June 2015, covers knowledge and skills, such as contract management techniques, with which PMP aspirants are expected to be familiar. The force majeure clause is one of these topics.

Details for Each Option:

AError! Not a valid embedded object. Arbitration

Incorrect. An arbitration clause requires that the parties resolve any disputes through an arbitration process as opposed to using the courts. However, in the event of a natural disaster, a party to a contract cannot use an arbitration clause to seek relief from contractual obligations.

BError! Not a valid embedded object. Force majeure

Correct. A force majeure clause is a common contractual clause that frees parties, bound by a contract, from liability or obligation when certain circumstances beyond their control arise making performance impossible. Examples of force majeure include war, riot, strikes, flooding, tornado, hurricanes, etc.

CError! Not a valid embedded object. No-contest

Incorrect. A no-contest clause is designed to threaten another party with litigation or criminal prosecution if they fail to take action or to cease a certain action. The no-contest clause is not applicable in the event of a natural disaster.

DError! Not a valid embedded object. Termination

Incorrect. The termination clause offers a release of the contractual obligation of a party in the event that the other party to the contract breaches the agreement. The question describes a natural disaster which renders a party to the contract unable to fulfill their obligation rather than a breach of the contract.

Reference:

https://www.projectmanagement.com/blog-post/8555/How-Project-Managers-Can-Execute-Force-Majeure-Clauses; see also https://en.wikipedia.org/wiki/Category:Contract_clauses

---

PMP Exam Simulator

PMP Exam 4

Filtered Mode: Displaying 200 questions

Question 192 of 200
Question ID: 612455

The project team is just starting the process of developing approaches to involve project stakeholders based on their needs, expectations, interests, and potential impact on the project. In support of this process, the project manager is advising the team to review information regarding the project purpose, objectives, and success criteria.

What is the best way for the team to obtain this information?

AError! Not a valid embedded object. Ask the project sponsor

BError! Not a valid embedded object. Study the stakeholder engagement plan

CError! Not a valid embedded object. Examine the stakeholder engagement assessment matrix

DError! Not a valid embedded object. Review the project charter

Question answered incorrectly

Hint:
What project document is available during project planning that contains high-level information on the project?

Correct Answer: D

Explanation:

The question suggests that the team is starting the Plan Stakeholder Engagement process. The project charter is one of the inputs into this process. The project charter contains information on the project purpose, objectives, and success criteria. Therefore, reviewing the project charter is the most appropriate action for the project team to take in this scenario.

Details for Each Option:

AError! Not a valid embedded object. Ask the project sponsor

Incorrect. The project sponsor may know the high-level project details. However, the project team should use the resources that are readily available rather than disturbing the sponsor. Therefore, this is not the best answer choice.

BError! Not a valid embedded object. Study the stakeholder engagement plan

Incorrect. The question implies that the Plan Stakeholder Engagement process is underway, and the stakeholder engagement plan is an output of this process. Therefore, the stakeholder engagement plan is not yet available to be used as a resource.

CError! Not a valid embedded object. Examine the stakeholder engagement assessment matrix

Incorrect. The question suggests that the Plan Stakeholder Engagement process is being performed, and a stakeholder engagement assessment matrix is a data representation technique that may be used during this process. Since the Plan Stakeholder Engagement process is just getting started, the stakeholder engagement assessment matrix has yet to be created. Additionally, the stakeholder engagement assessment matrix does not contain the information requested.

DError! Not a valid embedded object. Review the project charter

Correct. The project charter contains information on the project purpose, objectives, and success criteria. Therefore, reviewing the project charter is the most appropriate action for the project team to take in this scenario.

Reference:

A Guide to the Project Management Body of Knowledge, (PMBOK® Guide) – Sixth Edition, Project Management Institute Inc., 2017, Page(s) 518

PMP Exam 4

Filtered Mode: Displaying 200 questions

Question 193 of 200
Question ID: 610089

After a change request to expand the scope of the project has been submitted to the change control board (CCB), the project manager is reassigned to another project. The CCB approves the change and communicates the status of the change request to the newly hired project manager.

What should the new project manager do first?

AError! Not a valid embedded object. Direct the project team to implement the change

BError! Not a valid embedded object. Wait for further changes and implement them all together

CError! Not a valid embedded object. Consult the change management plan

DError! Not a valid embedded object. Update the lessons learned register

Question answered incorrectly

Hint:
What governs the way changes are managed?

Correct Answer: C

Explanation:

All proposed changes to a project must be handled according to the organization's change control process via a change request. In this scenario, a change request to expand the scope of the project was submitted to the change control board for review and analysis of its impact on the project. Once approved, the status of the change request is updated in the change log. The next logical step would be implementing the change. However, the scenario describes a new project manager who is likely not familiar with the change control processes defined for this particular project. One should look for the answer choice that best addresses the question asked under the circumstances provided in the scenario. If consulting the change management plan was not among the answer choices, then directing the project team to implement the change would have been the best answer. However, since each organization and each project within the organization may have its own change control process (which is specified in the change management plan),

consulting this plan should be the first thing the newly assigned project manager should do. For example, the change management plan may require the project manager to inform particular stakeholders about the approved change so that they may take actions assigned to them as part of the procedure prior to the implementation of the change. Therefore, in this case, consulting the change management plan is the best answer among the choices given in the situation described by the scenario.

Details for Each Option:

AError! Not a valid embedded object. Direct the project team to implement the change

> *Incorrect. Eventually, the approved change should be implemented. However, among the choices provided, directing the project team to implement the change is not the first thing for the project manager to do. There is another answer choice that more accurately addresses the question asked.*

BError! Not a valid embedded object. Wait for further changes and implement them all together

> *Incorrect. When a change request is approved, project resources are allocated to support the implementation of the change. Waiting for further changes (that may or may not be requested) would be wasting the allocated resources that otherwise could have been used for other project activities or re-allocated to other projects.*

CError! Not a valid embedded object. Consult the change management plan

> *Correct. Typically, once the change is approved, it should be implemented. However, each organization and each project within the organization has an established procedure to manage changes as outlined in the change management plan. Therefore, of the choices offered, consulting the change management plan is what the project manager should do first.*

DError! Not a valid embedded object. Update the lessons learned register

> *Incorrect. The lessons learned register is a project document used to record knowledge gained during a project so that it can be used in the current project and entered into the lessons learned repository to be used on future projects. While updating the lessons learned register is an ongoing activity that should be carried out continuously throughout the project life cycle, there is nothing in the question to suggest that any specific lessons have been learned from the situation described in the scenario.*

Reference:

A Guide to the Project Management Body of Knowledge, (PMBOK® Guide) – Sixth Edition,

Project Management Institute Inc., 2017, Page(s) 115-116

PMP Exam Simulator

PMP Exam 4

Filtered Mode: Displaying 200 questions

Question 194 of 200
Question ID: 612477

A project manager and team are creating the work breakdown structure (WBS) for a project. The project charter indicates that the project will take approximately seven years to complete. Since some of the deliverables will not be produced until far into the future, the project team has determined that further decomposition is not possible at this point for many of the subcomponents.

How should the project team resolve this situation?

AError! Not a valid embedded object. Seek the advice of someone that has worked on similar projects in the past

BError! Not a valid embedded object. Perform a product analysis to decompose the work packages into activities

CError! Not a valid embedded object. Divide and then subdivide the project scope and project deliverables into smaller, more manageable parts

DError! Not a valid embedded object. Employ rolling wave planning as a way to move forward with project planning

Question answered incorrectly

Hint:
What technique can be used to plan near-term work in detail, while the work in the future is planned at a higher level?

Correct Answer: D

Explanation:

Rolling wave planning is an iterative planning technique in which the work to be accomplished in the near term is planned in detail, while the work in the future is planned at a higher level.

Rolling wave planning is a form of progressive elaboration applicable to work packages, planning packages, and release planning when using an agile or waterfall approach. Work can exist at various levels of detail depending on where it is in the project life cycle. During early strategic planning when information is less defined, work packages may be decomposed to the known level of detail. As more is known about the upcoming events in the near term, work packages can be decomposed into activities. Of the available choices, rolling wave planning is the best technique to use to address the issue raised by the question.

Details for Each Option:

AError! Not a valid embedded object. Seek the advice of someone that has worked on similar projects in the past

> *Incorrect. This answer choice represents a form of expert judgment. Expertise should be considered from individuals or groups with knowledge of or experience with similar projects. However, the question states that further decomposition is not possible at this point in the project, therefore, it is unlikely that expert judgment will overcome the problem described by the question.*

BError! Not a valid embedded object. Perform a product analysis to decompose the work packages into activities

> *Incorrect. Product analysis is a technique that can be used to define products and services. Product analysis is not a technique that is used in the creation of the work breakdown structure (WBS) and, therefore, would not permit further decomposition.*

CError! Not a valid embedded object. Divide and then subdivide the project scope and project deliverables into smaller, more manageable parts

> *Incorrect. This answer choice represents the definition of decomposition. The question states that further decomposition is not possible at this point in the project. Therefore, decomposition cannot be used to break down the WBS further.*

DError! Not a valid embedded object. Employ rolling wave planning as a way to move forward with project planning

> *Correct. Decomposition may not be possible for a deliverable or subcomponent that will be accomplished far into the future. The project management team usually waits until the deliverable or subcomponent is agreed on, so the details of the work breakdown structure (WBS) can be developed. This technique is sometimes referred to as rolling wave planning.*

Reference:

A Guide to the Project Management Body of Knowledge, (PMBOK® Guide) – Sixth Edition,

Project Management Institute Inc., 2017, Page(s) 185, 160

PMP Exam 4

Filtered Mode: Displaying 200 questions

Question 195 of 200
Question ID: 610013

The sponsor asks the project manager for the project's resource breakdown structure (RBS) so that she can present it to senior management during an upcoming meeting. All the subsidiary management plans are complete, but the RBS is not yet developed.

Which process must be completed in order to produce the RBS for the sponsor?

AError! Not a valid embedded object. Plan Resource Management

BError! Not a valid embedded object. Estimate Activity Resources

CError! Not a valid embedded object. Develop Project Management Plan

DError! Not a valid embedded object. Acquire Resources

Question answered incorrectly

Hint:
In what process do you determine the personnel and equipment required to create the deliverables?

Correct Answer: B

Explanation:

Estimate Activity Resources is a process of estimating team resources and the type and quantities of materials, equipment, and supplies necessary to perform project work. The resource breakdown structure (RBS) is one of the outputs of this process. The RBS is a hierarchical representation of resources by category and type. One of the approaches to answering questions on the PMP exam is elimination. The incorrect answer choices can be eliminated for the reasons provided in their respective explanations. Of the choices provided, only Estimate Activity Resources is the process that should be completed in order to produce the RBS for the sponsor, thus making Estimate Activity Resources the best answer to the question asked.

Note, RBS is mainly referred to as a risk breakdown structure. However, in its Glossary, the

PMBOK® Guide mentions RBS as also a resource breakdown structure.

Details for Each Option:

AError! Not a valid embedded object. Plan Resource Management

Incorrect. The Plan Resource Management process is the first step of the Project Resource Management Knowledge Area. The Plan Resource Management process produces the resource management plan, which is a subsidiary plan of the project management plan. This answer is incorrect because the scenario states all subsidiary plans have already been completed.

BError! Not a valid embedded object. Estimate Activity Resources

Correct. The Estimate Activity Resources process estimates the team and physical resources needed to carry out the project work. The RBS is an output of this process. The RBS categorizes resources and is used for planning, managing and controlling project work.

CError! Not a valid embedded object. Develop Project Management Plan

Incorrect. The Develop Project Management Plan process defines how the project is executed, monitored and controlled, and closed. The resulting output is comprised of several components, including the subsidiary resource management plan, which has already been completed, making this choice an incorrect answer.

DError! Not a valid embedded object. Acquire Resources

Incorrect. The Acquire Resources process is part of the Executing Process Group, which follows the creation of the RBS. In other words, since this process begins after the RBS is created, this answer choice can be eliminated.

Reference:

A Guide to the Project Management Body of Knowledge, (PMBOK® Guide) – Sixth Edition, Project Management Institute Inc., 2017, Page(s) 320, 326

PMP Exam Simulator

PMP Exam 4

Filtered Mode: Displaying 200 questions

Question 196 of 200
Question ID: 612545

A project manager sends an email to the product developers notifying them of a critical defect found by the customer and asking them to report back to her so that she could update the sponsor. The next day, the project manager is bombarded by the developers stopping by her office to defend their efforts and point the blame elsewhere.

What could the project manager have done differently to obtain a more positive response from the developers?

AError! Not a valid embedded object. Used push communication method

BError! Not a valid embedded object. Chosen different communication media

CError! Not a valid embedded object. Used pull communication method

DError! Not a valid embedded object. Asked the developers to update the sponsor directly

Question answered incorrectly

Hint:
Effective communications management includes decisions on how to choose the best method to meet specific project needs regarding communication.

Correct Answer: B

Explanation:

Some resources say as much as 90% of a project manager's time is spent on communication. Effective communication builds a bridge to diverse stakeholders and team members and develops the relationships necessary for successful project outcomes. The matching of media to messages is an important aspect of effective communication and effective management. For example, deciding when it is better to communicate in writing versus orally, or deciding when to prepare an informal memo versus drafting a formal report is an important aspect of managing

communications on projects. According to the scenario, the developers did not respond well to the email regarding the defect. By communicating the information verbally, for example setting up a meeting, video call, or conference call, the project manager could have incorporated opportunities for interaction and obtained a more positive response from the developers.

Details for Each Option:

AError! Not a valid embedded object. Used push communication method

> *Incorrect. Push communication is distributed directly to specific recipients who need to receive the information but does not ensure the communication actually reached or was understood by the recipient. Examples of push communication include email, letters, memos, and faxes. In the scenario, the project manager sent the information about the defect by email, which is an example of push communications. According to the scenario described, this type of communication did not work well, making push communication an incorrect answer.*

BError! Not a valid embedded object. Chosen different communication media

> *Correct. The matching of media to messages is an important aspect of effective communication and effective management. For example, deciding when it is better to communicate in writing versus orally, or deciding when to prepare an informal memo versus drafting a formal report. The developers' response to the email suggests that the project manager might have been better off sharing the information verbally allowing for more interaction between her and the developers.*

CError! Not a valid embedded object. Used pull communication method

> *Incorrect. Pull communication requires the recipients to access the content at their discretion. Examples of pull communication are web portals, intranet sites, and knowledge repositories. The information the project manager sent by email was time sensitive and required action. It is unclear if using pull communication would have resulted in a more positive response from the developers.*

DError! Not a valid embedded object. Asked the developers to update the sponsor directly

> *Incorrect. This action is likely to have the same effect as the one described in the scenario, if not worse. It is the project manager's responsibility to communicate with the team and update the stakeholders, including the sponsor, accordingly.*

Reference:

A Guide to the Project Management Body of Knowledge, (PMBOK® Guide) – Sixth Edition, Project Management Institute Inc., 2017, Page(s) 381, 61; see

also https://www.pmi.org/learning/library/communication-key-life-cycle-media-5340

PMP Exam Simulator

PMP Exam 4

Filtered Mode: Displaying 200 questions

Question 197 of 200
Question ID: 612369

While reviewing the issue log of the project you are leading, you suspect there is a pattern of errors and defects. You and your project team want to determine the causes and frequency of these errors and defects in the system. In particular, you are interested in identifying and ranking the vital few sources that are responsible for causing the majority of the problems.

Which of the following tools will help you the most?

AError! Not a valid embedded object. Run chart

BError! Not a valid embedded object. Scatter diagram

CError! Not a valid embedded object. Pareto chart

DError! Not a valid embedded object. Fishbone diagram

Question answered incorrectly

Hint:
The results are typically plotted on a vertical bar chart, a histogram.

Correct Answer: C

Explanation:

You want to group the error and defects captured in the issue log into categories. These categories would represent the source of the issues. Of the choices provided, the Pareto chart is the only answer choice that allows for the ranking of grouped data points (in this case the error and defects) represented by categories. A Pareto chart is a special form of a vertical bar chart, or a histogram, where each bar represents a source of a problem. The height of the bar reflects the relative frequency of the corresponding source. A histogram, such as the Pareto chart, is an example of the data representation tools and techniques that can be used during the Control Quality process described in the scenario. Hence, of the available choices, the Pareto chart is the

best tool to use to identify and rank the vital few sources that are responsible for causing the majority of the problems and is, therefore, the best answer to the question asked.

While the topic of this question is only briefly discussed in the *PMBOK® Guide*, the Project Management Professional (PMP)® Examination Content Outline, June 2015, covers knowledge and skills with which PMP aspirants are expected to be familiar. Various quality control tools and techniques are among these topics.

Details for Each Option:

AError! Not a valid embedded object. Run chart

> *Incorrect. A run chart is a line graph with data points plotted over time used to identify trends or patterns. A run chart does not categorize data but rather charts up and/or down fluctuations in the data.*

BError! Not a valid embedded object. Scatter diagram

> *Incorrect. A scatter diagram is a graph that shows the relationship between two variables in order to determine if a correlation exists. A scatter diagram does not categorize or rank data.*

CError! Not a valid embedded object. Pareto chart

> *Correct. A Pareto chart is a special form of a histogram or vertical bar chart used to identify the most common sources that are responsible for causing the majority of the problems.*

DError! Not a valid embedded object. Fishbone diagram

> *Incorrect. A fishbone diagram, also known as a cause-and-effect diagram, breaks down the causes of the problem statement identified into discrete branches, helping to identify the main or root cause of the problem. A fishbone diagram is a visualization tool and does not rank data.*

Reference:

A Guide to the Project Management Body of Knowledge, (PMBOK® Guide) – Sixth Edition, Project Management Institute Inc., 2017, Page(s) 304; see also https://www.pmi.org/learning/library/leveraging-six-sigma-benefits-realization-6726

PMP Exam 4

Filtered Mode: Displaying 200 questions

Question 198 of 200
Question ID: 612216

A project manager is leading a product development project within a centralized organizational structure. One of the project team members has left the organization and needs to be replaced if the project goals are to be met. The project manager has identified an employee within the organization that has the necessary skill set to fill the vacancy.

What should the project manager do first?

AError! Not a valid embedded object. Submit a change request to update the schedule baseline

BError! Not a valid embedded object. Negotiate with the employee's functional manager

CError! Not a valid embedded object. Discuss the staffing situation with the project sponsor

DError! Not a valid embedded object. Reassign the identified employee to the project team

Question answered incorrectly

Hint:
A centralized organization is also known as a functional organization structure.

Correct Answer: B

Explanation:

The question indicates that the project exists within a centralized (also called functional) organizational structure. Within a centralized organization, the project manager has little or no direct control over resources. If the project manager needs to acquire an employee from within the company, the project manager will need to negotiate the reassignment of the employee to the project. Therefore, of the available choices, the project manager should first negotiate with the employee's functional manager to release the employee to work on the project.

Details for Each Option:

AError! Not a valid embedded object. Submit a change request to update the schedule baseline

Incorrect. Before such a step, the project manager should make every reasonable effort to keep to the schedule baseline (e.g. acquire new team member, compress schedule, use overtime options, fill the gap with existing team members).

BError! Not a valid embedded object. Negotiate with the employee's functional manager

Correct. Within a centralized organization, the functional manager has control over resources. If the project manager needs to acquire an employee from within the company, the project manager needs to negotiate with the functional manager.

CError! Not a valid embedded object. Discuss the staffing situation with the project sponsor

Incorrect. Before escalating this issue with the project sponsor, the project manager should first attempt to acquire the identified employee from the functional manager.

DError! Not a valid embedded object. Reassign the identified employee to the project team

Incorrect. Within the centralized type of organizational structure, the project manager has little or no control over project resources. Therefore, the project manager will not have the authority to reassign the identified employee.

Reference:

A Guide to the Project Management Body of Knowledge, (PMBOK® Guide) – Sixth Edition, Project Management Institute Inc., 2017, Page(s) 47

PMP Exam 4

Filtered Mode: Displaying 200 questions

Question 199 of 200
Question ID: 612612

You are halfway through a project, which has experienced several setbacks due to unanticipated problems. Based on recent feedback, you are concerned that critical support for the project among key stakeholders is eroding. You want to bring the stakeholders together for a meeting to address any concerns and rebuild support for the project.

Which of the following meetings would be the most beneficial for the key stakeholders to attend?

AError! Not a valid embedded object. Customer wrap-up meeting

BError! Not a valid embedded object. Change control meeting

CError! Not a valid embedded object. Celebration meeting

DError! Not a valid embedded object. Iteration retrospective

Question answered incorrectly

Hint:
The ability of stakeholders to influence the project is typically highest during the initiating stage and gets lower as the project progresses.

Correct Answer: D

Explanation:

The question suggests that the Manage Stakeholder Engagement process is underway. Various meetings can be beneficial in this process including the iteration retrospective. An iteration retrospective is a specialized type of meeting used on projects with an agile framework and is conducted at the end of each iteration. The purpose of a retrospective is to cover project progress thus far and determine what worked well, what did not work well, and how project performance can be improved going forward. Inviting the key stakeholders to the iteration retrospective will allow the project team to address any concerns the stakeholders may have and develop a plan to ensure the problems encountered do not recur. This approach should be beneficial in reassuring the stakeholders that positive action is being taken to bring the project back into alignment with

project goals. Additionally, the iteration retrospective is held throughout project execution at the end of each iteration. The ability of stakeholders to influence the project is typically highest during the initiating stage and gets lower as the project progresses. The incorrect answer choices represent meetings that are held at the end of the project and/or are not relevant to the Manage Stakeholder Engagement Process.

Note, even though in "pure" agile environment, the iteration retrospective meetings are typically held by and for the team members with an agile leader (such as a scrum master or an agile coach), other project stakeholders can be invited as necessary. Therefore, while not ideal, of the available choices, the iteration retrospective would be the most beneficial for key stakeholders to attend as it pertains to the Manage Stakeholder Engagement process.

Details for Each Option:

AError! Not a valid embedded object. Customer wrap-up meeting

> *Incorrect. The customer wrap-up meeting occurs at the end of the project. The level of influence of project stakeholders is the lowest at the end of the project. With the project halfway complete and project support in jeopardy, it would be best to take more immediate action and not wait until the end of the project. While the customer wrap-up meeting may be required for certain stakeholders, it is not the most beneficial meeting from the standpoint of managing stakeholder engagement.*

BError! Not a valid embedded object. Change control meeting

> *Incorrect. Change control meetings are held with a change control board (CCB) that is responsible for meeting and reviewing the change requests and approving, rejecting, or deferring change requests. It is not known from the description provided by the question if a CCB has been authorized by the project management plan. Even if the project utilizes a CCB, the focus of the meeting is to review and dispose change requests, which is unlikely to have the desired effect on stakeholder engagement.*

CError! Not a valid embedded object. Celebration meeting

> *Incorrect. A celebration meeting usually occurs at the end of a project to reward the project team and celebrate the success of the project. The celebration meeting may also include key stakeholders. However, at the conclusion of a project is when stakeholders have the least influence on the outcome of the project, making the celebration meeting of lesser importance for managing stakeholder engagement compared with meetings conducted earlier in the project. Additionally, the scenario describes a project that has been experiencing issues. It is not clear yet if there will be anything to celebrate.*

DError! Not a valid embedded object. Iteration retrospective

Correct. An iteration retrospective is a specialized type of meeting used on projects with an agile framework conducted at the end of each iteration. The purpose of an iteration retrospective is to cover project progress thus far and determine what has gone well, what has not gone well, and how project performance can be improved going forward. Inviting the key stakeholders to the iteration retrospective will allow the project team to address any concerns the stakeholders may have and develop a plan to ensure the problems encountered do not recur.

Reference:

A Guide to the Project Management Body of Knowledge, (PMBOK® Guide) – Sixth Edition, Project Management Institute Inc., 2017, Page(s) 528

PMP Exam 4

Filtered Mode: Displaying 200 questions

Question 200 of 200

Question ID: 612595

A software developer on an agile project team has discovered that adding a second computer monitor has increased productivity by reducing the time spent opening and closing screens. The company has extra monitors in storage, so cost is not an issue. As an agile coach, you want this practice to be adopted by the rest of the team members.

What is your best course of action?

AError! Not a valid embedded object. Discuss the best practice with the project team during the project retrospective

BError! Not a valid embedded object. Have the project team member share the best practice during the upcoming iteration retrospective

CError! Not a valid embedded object. Request the PMO to establish a new corporate policy that all developers should use two monitors

DError! Not a valid embedded object. Pull the extra monitors out of storage and assign one additional monitor to each developer

Question answered incorrectly

Hint:
Project team members should feel empowered to share and adopt best practices.

Correct Answer: B

Explanation:

A common problem with establishing continuous improvement during project execution is that lessons learned can become an afterthought as the project team focuses on the work of producing the project's deliverables. Best practices and knowledge gained may be recorded in the lessons learned register but that information is of no value if it is not shared with the project team to improve the performance of the project. When an agile approach is used, the Control Schedule process implied by the question is concerned with conducting retrospectives. An iteration retrospective is a scheduled review in which best practices can be shared to improve the performance of future iterations. Having the team member that discovered the best practice share her experience with the project team will bring credibility as she is already having success with improved productivity. Therefore, of the available choices, having the project team member share the best practice during the upcoming iteration retrospective is the best answer to the question asked.

Details for Each Option:

AError! Not a valid embedded object. Discuss the best practice with the project team during the project retrospective

> *Incorrect. A project retrospective is held at the end of a project to discuss knowledge gained during the project that might be beneficial for future projects. However, this action will not improve the performance of the current project.*

BError! Not a valid embedded object. Have the project team member share the best practice during the upcoming iteration retrospective

> *Correct. An iteration retrospective is a scheduled review in which best practices can be shared to improve the performance of future iterations.*

CError! Not a valid embedded object. Request the PMO to establish a new corporate policy that all developers should use two monitors

> *Incorrect. While the project team member that discovered the best practice may find two monitors beneficial, this might not be the case for all team members. Additionally, this action may not be beneficial for all software development projects and may create resentment among other teams within the organization who are being forced to conform to*

someone else's work process.

DError! Not a valid embedded object. Pull the extra monitors out of storage and assign one additional monitor to each developer

Incorrect. You, as a leader (either an agile coach or project manager), should make the extra monitors available for the team. However, just assigning an additional monitor does not mean that the team members will understand the benefits. This action also does not empower the team members to determine how they can be the most productive.

Reference:

A Guide to the Project Management Body of Knowledge, (PMBOK® Guide) – Sixth Edition, Project Management Institute Inc., 2017, Page(s) 224, 230